Lincoln County Wetland Rehabilitation and Outdoor Learning Center

The goal of the Lincoln County Wetland Rehabilitation and Outdoor Learning Center project is to rehabilitate two wetland sites that provide recreational and educational opportunities, quality wildlife habitat, and floodplain management in concurrence with urban and farming practices. These include a system of trails, an observation blind, a covered shelter, wildlife habitat structures and interpretive signage.

The first feature that visitors will encounter at the wetland area is the entrance sign. The sign will welcome visitors and list the partners involved in the project. Next, the City of Chandler is planning to provide a parking area in close proximity to the wetlands. A trail will lead visitors to a kiosk near the boardwalk that crosses the first wetland. Preliminary design plans for the kiosk incorporate the first of several wildlife habitat structures seen at the site, a Chimney Swift Tower. The kiosk itself will be 4-sided with each side bearing an information and/or interpretive panel. One side will contain a map of the site, an informational brochure about the wetland area, a wildlife checklist and a children's checklist. The other panels will include an introduction to wetlands, information on Chimney Swifts and a description of the management of wetland site. A series of interactive interpretive panels entitled "Wetland Metaphors" will be mounted near the kiosk and the boardwalk. This display will be adapted from an activity in the Project WILD curriculum and will explain the functions and values of wetlands.

A wooden boardwalk will lead visitors across the first wetland to a peninsula that connects to the dike that separates the wetland from a second wetland (completed Wetlands Reserve Program wetland). Once visitors reach the top of the wetland dike, they can view two separate wetland units. The center dike divides the wetland area into two distinct pools. A trail will lead visitors from the dike around the west side of the wetlands. From there the trail will go across a foot bridge over Bell Cow Creek and through a wooded area to the Wetland Gazebo located near another wetland area to be rehabilitated on west side of the ball fields. At the Wetland Gazebo, visitors will be able to sit and enjoy the wonders of the wetlands. They will also be able to observe and identify several species of wetland birds. Interpretive features of several species of birds including waterfowl, wading birds and shorebirds will be located inside the Wetland Gazebo. A series of interactive interpretive signs entitled "The Beauty of Mud" will also mounted on the handrail of the gazebo. This series of signs will describe the importance of wetland mud in the food web of a wetland.

Another major interpretive feature that may be incorporated at the wetland area is an Observation Blind. The blind would be enclosed with several viewing windows facing the wetland units. Interpretive signs inside the blind would include a Wetland Bird Identification sign and a chalkboard for visitors to record their observations. Access to the observation blind would be provided by a Quiet Trail that leads from the parking area to the west end of the wetland units. A series of interpretive signs illustrating the importance of being quiet when viewing wildlife is located along the quiet trail.

Additional habitat structures that may be located at the wetland areas include bat houses, wood duck nest boxes, and Purple Martin nest gourds. These structures would be located in various places within the wetland units.

Lincoln County Wetland Rehabilitation and Outdoor Learning Center

OKLAHOMA CONSERVATION COMMISSION

N

Gazebo
Trail
Dike
Bridge
Boardwalk
Swell
Wetland Areas

0 0.025 0.05 Miles

U.S. Department of Agriculture
Natural Resources Conversation Service

OK-ENG-6
(Rev. 05/04)
Page 1 of 2

WETLAND RESTORATION EMBANKMENT DESIGN & LAYOUT

Cooperator City of Chandler Legal Description In NW 1/4 9-12-4

I.D. No. _____ Field No. 2 Structure No. Unit - 2

This standard design is applicable only for sites with embankment heights of 8 feet or less. (measured from Auxiliary Spillway to low point on centerline) !

H_D=Design height of embankment, includes H_w, H_x, and H_f+d

H_w=Design height water stage

H_x=Flood storage volume

H_f=Freeboard

H_s=Allowance for settlement

d = Designed depth of flow in Auxiliary Spillway

Cross Section of Embankment

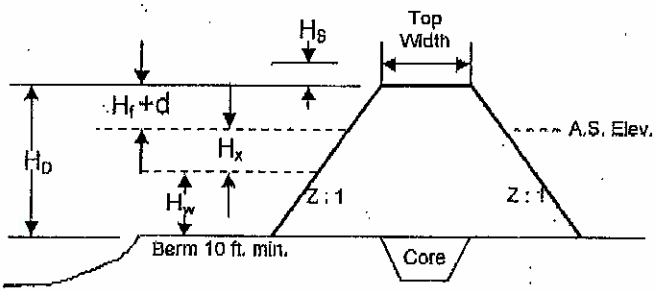

Note: For further explanation see page 13-34 EFH.

1. Availability of water:
   Floodplain overflows periodically (Yes) No
   If No, (Storage @ H_w _____ Ac.Ft.) ≤ (1yr.-24hr. runoff X D A /12) X (1.15 or 1.5) 1/
   _____in. X _____Ac./12 X _____ = _____Ac.Ft.
   1/ Use 1.15 for sites west of I-35 and 1.5 for sites east of I-35
2. Elevation of maximum design water height (H_w) 838.5
3. Surface Area at H_w 3.8 Ac.
4. Contributing D A (Excluding Area @ H_w) 2 Ac.
5. Auxiliary Spillway Design Storm 25 yr.
6. Elevation Auxiliary Spillway = Elevation H_w 838.5 + H_x 0.5 = 839.0
7. Auxiliary Spillway: Width = 10 (10 ft. min.)
   Side Slopes 15 :1 (4:1 or flatter)
8. Elevation Top of Embankment = Elevation H_w 838.5 + (H_x 0.5 + H_f + d 1.5) = 840.5
9. Emb. Side Slopes (Z): Front 5 :1 Back 5 :1
10. Settlement Allowance (H_s) = 10 %
11. Core Depth 2 ft Core Slope 1.5 :1
12. Berm Width 20 ft.

Settlement Allowance

Type of Equipment	Percent Fill Height
Carry All	5
Dozer	10
Terrace Machine & Motor Grader	15
Drag Line	20

Computation & Remarks:
Top of Emb. over pipe 840.5
Rest of Emb. depth of flow in spillway 839.5

Flood Routed Yes (No) DA smaller than SA

Type of water control structure (if applicable) Inline Riser

See drawing # _____ for details.

Measured Length 635 Ft. Yardage 2050 cu. yds. Est.

Vegetated Area _____ Ac.

Design Approved By _____

Date _____ Engineering Job Class I II III IV V (circle one)

CONTROL STRUCTURE TABLE
OK WRP

STRUCTURE	PIPE DIAM.	PIPE TYPE	RISER "H"	EL. "A"	EL. "B"	EL. "C"	EL. "D"	EL. "E"	DIM. "I"	"W"	SLOPES FRONT	SLOPES BACK	STRUCT. LENGTH *
WCS #1	24"	HDPE	6'	840.5	838.5	834.0	834.0	834.0	N/A	20	5:1	5:1	95'

* CULVERT LENGTH = STRUCTURE LENGTH – RISER AND COUPLER WIDTH

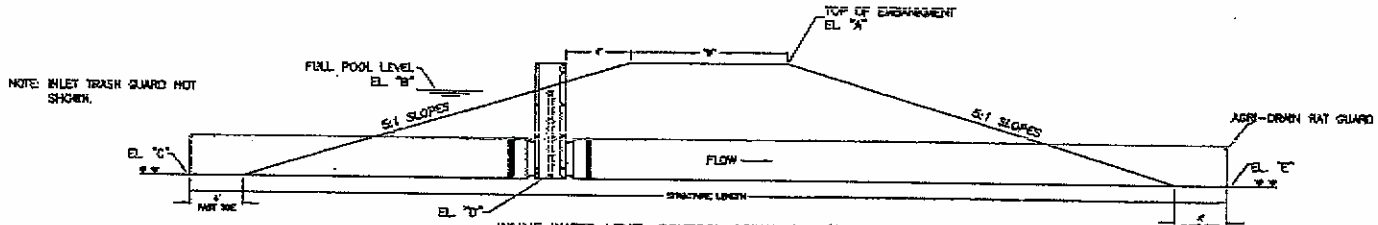

INLINE WATER LEVEL CONTROL STRUCTURE (AGRI-DRAIN)
NOT TO SCALE

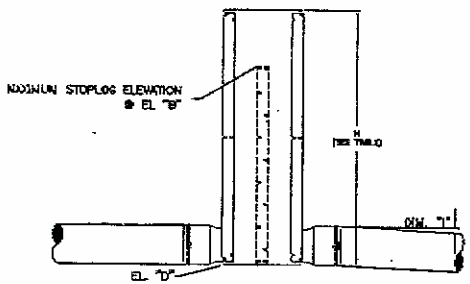

AGRI-DRAIN INLINE WATER CONTROL STR.
NOT TO SCALE

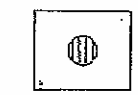

AGRI-DRAIN COVER

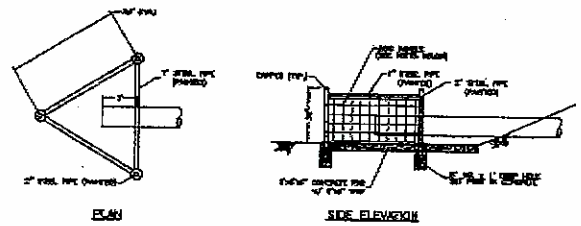

INLET TRASH GUARD
INSTALL GUARD AT EACH INLINE WCS INLET

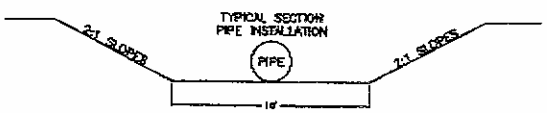

PIPE INSTALLATION & REMOVAL DETAIL
SCALE: 1" = 4'

NOTES:
1. Minimum height of hog panel to be 34".
2. Fasten panels to each side and top with double looped, 10 gage insulated copper wire securely twisted. 2' maximum spacing for wire loops, with minimum 2 loops per post and 5 loops per brace.
3. Panels shall be 1/4" galvanized steel rods welded together to form a panel. Maximum spacing of rods shall be 6 inches vertical and 8 inches horizontal.
4. Panels placed across top shall be securely fastened together per Note 2. Trim panels to fit.

city of chandler
wetland unit #2

U.S. DEPARTMENT OF AGRICULTURE
NATURAL RESOURCES CONSERVATION SERVICE

Designed Dennis Fink Date 9/13/07
Checked
Approved
Sheet ___ of ___
OK-DWG-No. 100(9-92)

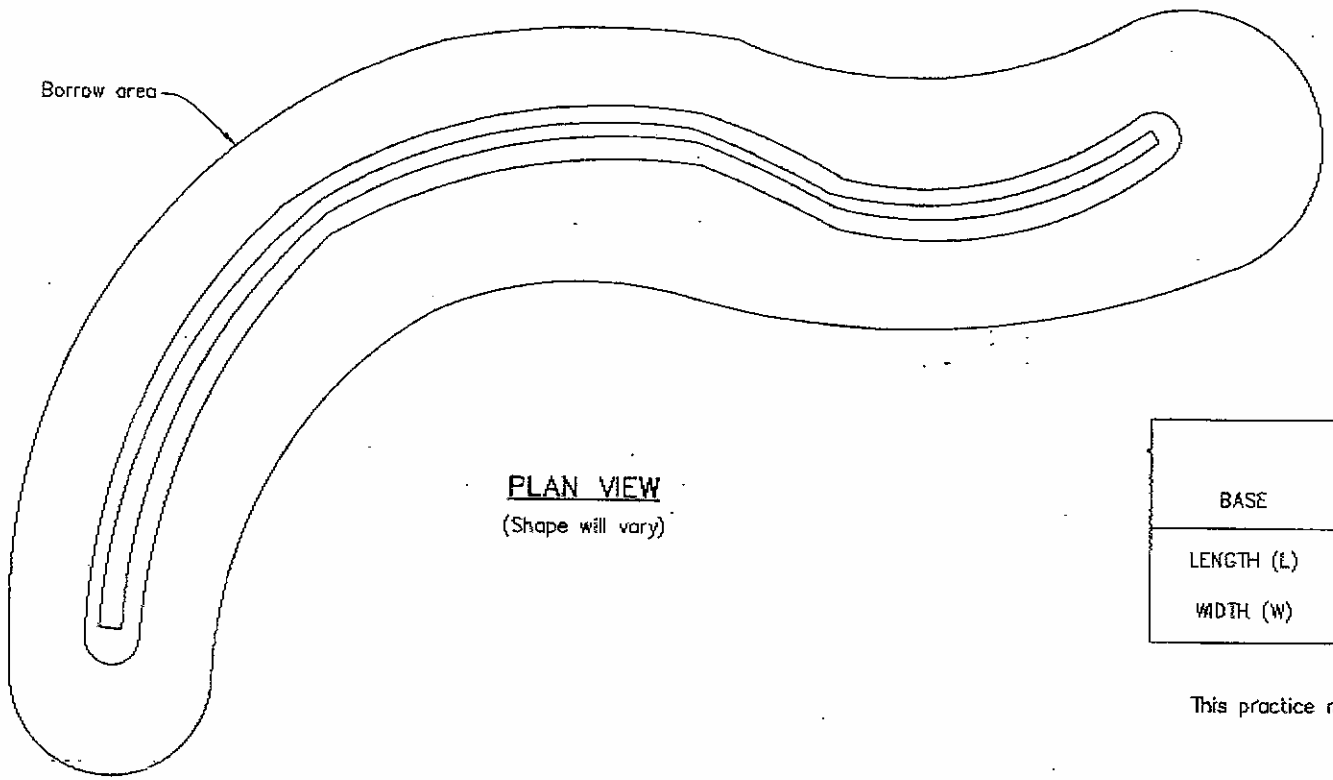

PLAN VIEW
(Shape will vary)

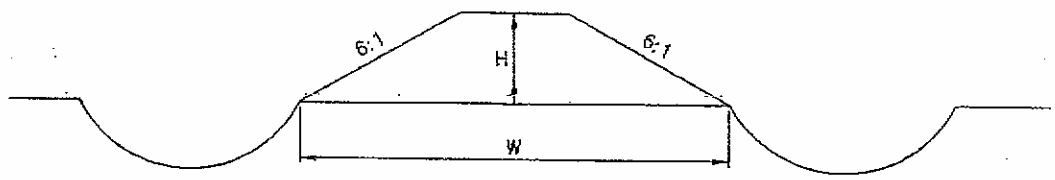

TYPICAL SECTION OF ISLAND
(Built from all sides)

NOTES:

1. Length is measured along the centerline of the island. Tolerance is ± 30'. Width tolerance is ± 2'.
2. Nesting islands should be 2' in height. Submerged islands should be 1' in height.
3. Yardage is estimated at 600 cubic yards for nesting islands and 300 cubic yards for submerged islands based on the dimensions shown.

BASE	H 1'	H 2'	INSTALLED
LENGTH (L)	584'	415'	
WIDTH (W)	20'	32'	

This practice meets NRCS specifications.

NRCS Representative _____ Date _____

NOT TO SCALE

WETLAND RESERVE PROGRAM
CONCEPTUAL SKETCH
Snake Island
(Nesting or Submerged)

For Estimates only
Island will be staked in field.

U.S. DEPARTMENT OF AGRICULTURE
NATURAL RESOURCES CONSERVATION SERVICE

		Date
Designed		
Checked		
Approved		

Sheet ___ of ___

T.R. Potter

OK-DWG-No. 615a (01-06)

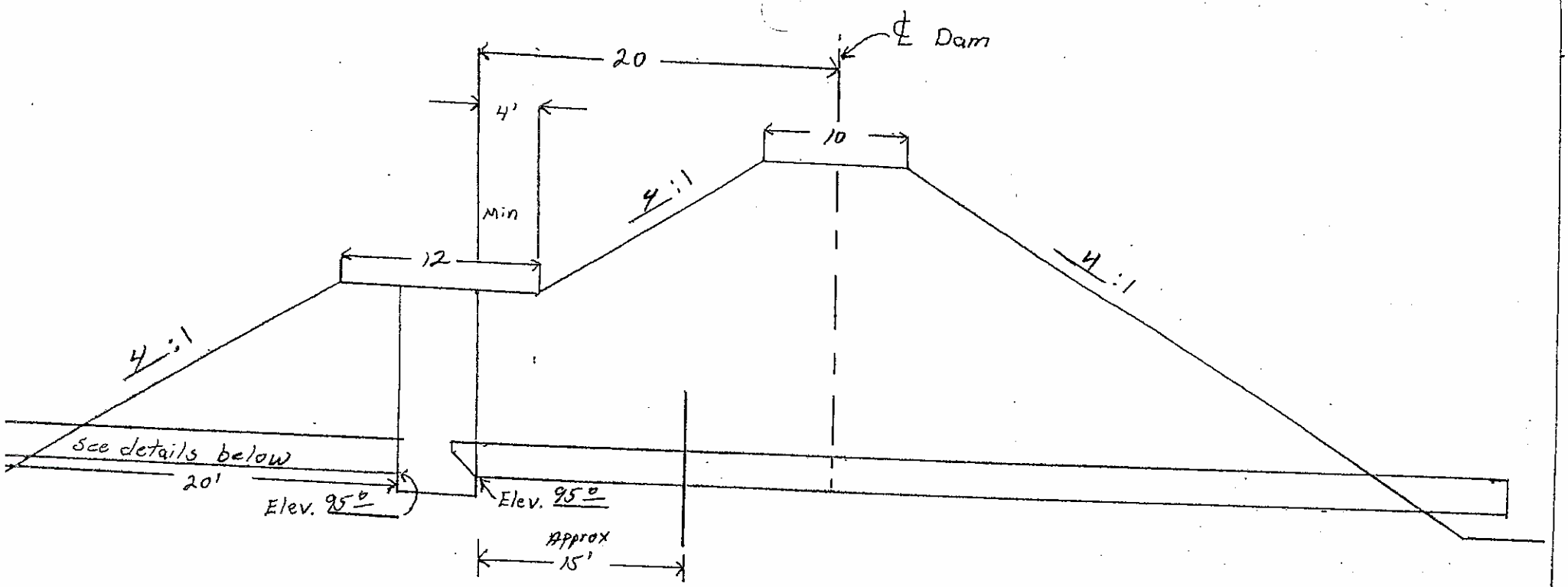

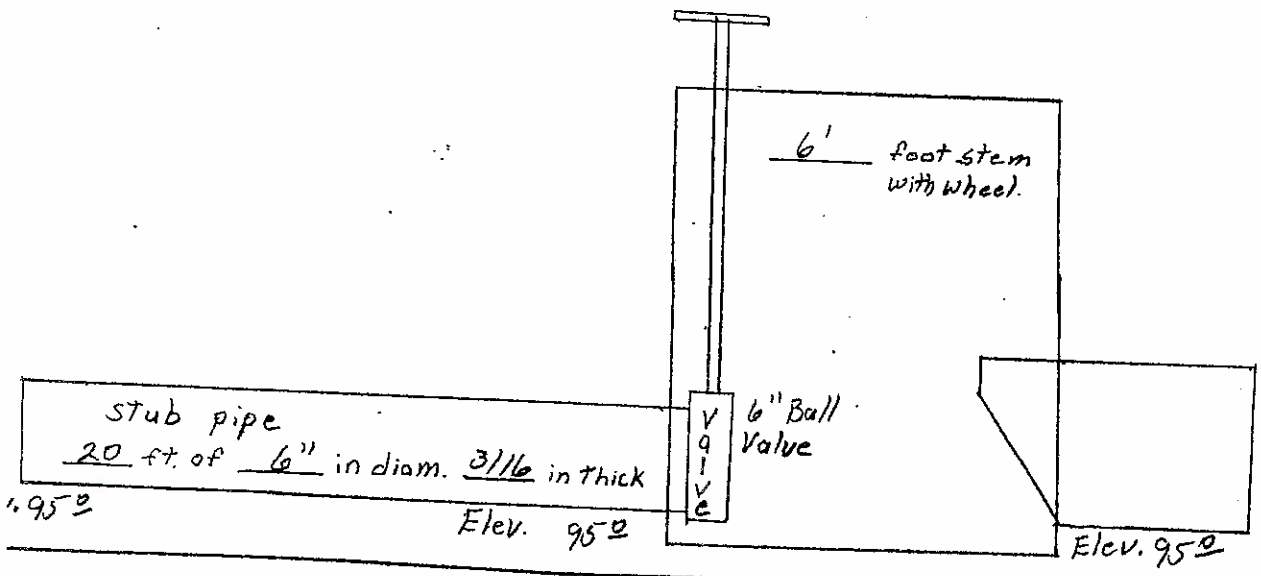

Canopy Drop Inlet with stub pipe

City of Chandler wetland pond

U.S. DEPARTMENT OF AGRICULTURE
SOIL CONSERVATION SERVICE

Designed Dennis Fowler Date 12-18-02
Checked
Approved
Sheet ___ of ___

OK—DWG—No. 100 (9—92)

Top of Dam Elev. 100.0

Emergency Spillway Elev. 98.0

Principal Spillway Elev. 97.5

Barrel Invert Elev. 95.0

See Attached OK-DWG-No-100

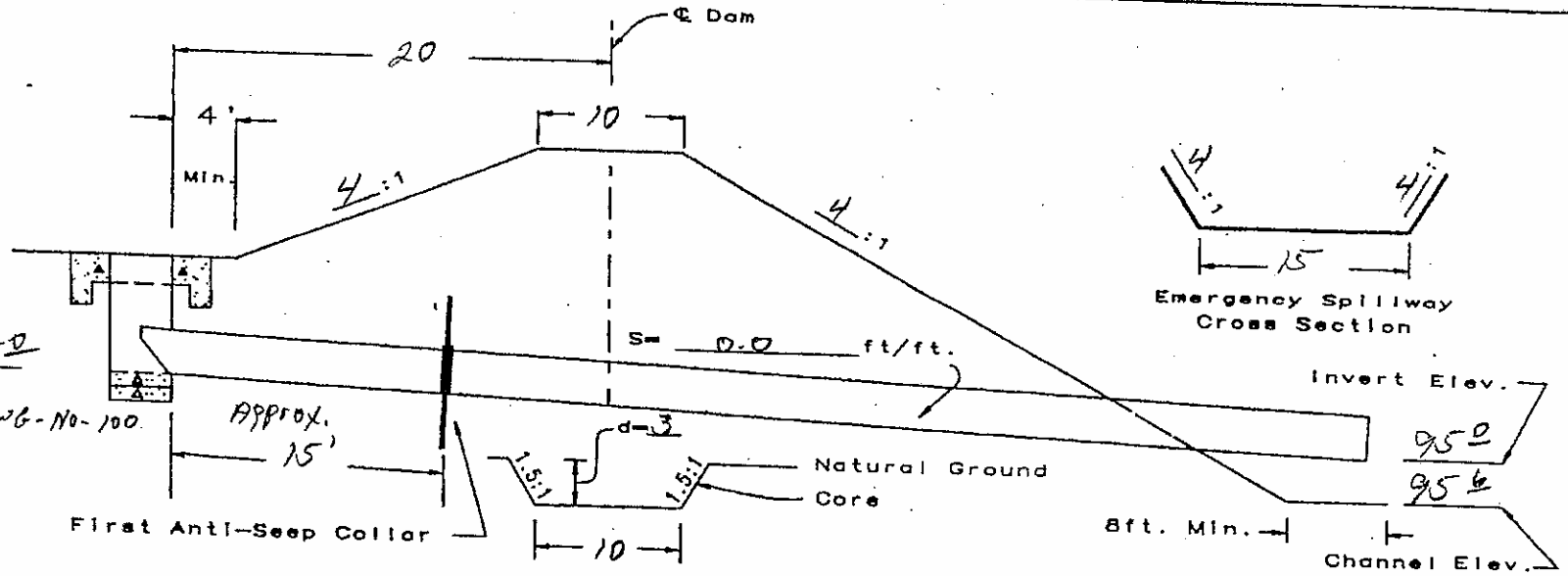

Emergency Spillway Cross Section

CROSS SECTION OF DAM ALONG ℄ OF PRINCIPAL SPILLWAY

Note: For Trash Guard Detail See OK-DWG-No.231a.

Riser

3 ft of 36 in diam of 5/16 inch thick welded steel.

Barrel

55 ft of 18 in diam of 1/4 inch thick welded steel.

1 Antiseep Collars 5 1/2 ft x 5 1/2 ft

@ — foot spacing 14 gage flat or 16 gage corr.

QUANTITIES

Concrete 20 Cu. Yds.

Estimated Earthwork 600 Cu. Yds.

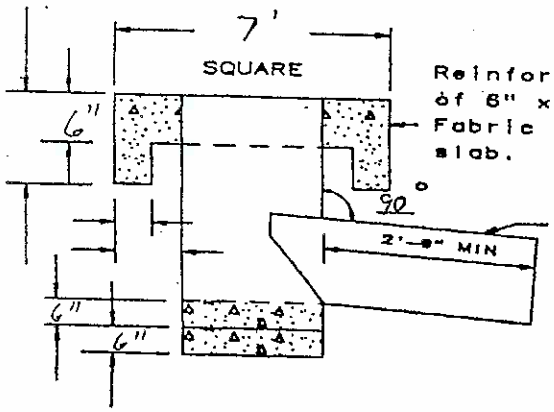

Reinforce concrete with one layer of 6" x 6" x 10 gage Welded Wire Fabric in center of top and bottom slab.

Weld pipe stub to riser pipe with 1/4" continuous fillet weld.

CROSS SECTION OF RISER

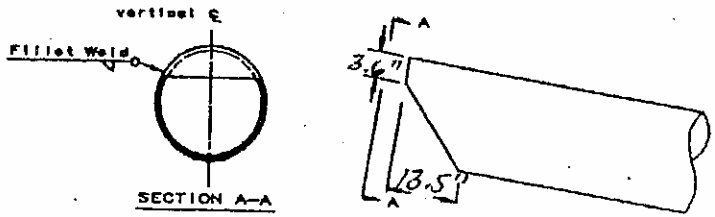

CANOPY INLET DETAIL

NOT TO SCALE

CANOPY DROP INLET STRUCTURE
WELDED STEEL PIPE

City of Chandler wetland Pond

U.S. DEPARTMENT OF AGRICULTURE
NATURAL RESOURCES CONSERVATION SERVICE

Designed Dennis Fowler Date 12-18-02

Checked

Approved

Sheet ___ of ___

OK-DWG-No. 206 (1-96)