Note: This is a reference cited in *AP 42, Compilation of Air Pollutant Emission Factors, Volume I Stationary Point and Area Sources.* AP42 is located on the EPA web site at www.epa.gov/ttn/chief/ap42/

The file name refers to the reference number, the AP42 chapter and section. The file name "ref02_c01s02.pdf" would mean the reference is from AP42 chapter 1 section 2. The reference may be from a previous version of the section and no longer cited. The primary source should always be checked.

Debbie Perry

AP-42 Section 9.9.1
Reference 18
Report Sect.
Reference

Oklahoma Cooperative Extension

Division of Agricultural Sciences and Natural Resources
Oklahoma State University

Department of Agricultural Economics • 513 Agricultural Hall
Stillwater, Oklahoma 74078-0505 • (405) 744-6081 • FAX (405) 744-8210

512 Agricultural Hall
(405) 744-9820

October 21, 1994

Mr. Larry Byrum, Director
Air Quality Division
4545 N. Lincoln Blvd.
Suite 250
Oklahoma City, OK 73105-3483

Dear Mr. Byrum:

I have attached a report containing the results of the grain elevator dust emission study conducted in Alva, Ok. on Sept. 26-27. I have also forwarded a copy of this report to the DEQ and AQC representatives who attended the test and I have provided a copy to the OGFA. These results should be useful in developing representative and scientifically defendable emission factors.

Please let me know if you have any questions, or if we can provide any further clarifications. We appreciate this opportunity to assist the Oklahoma Department of Environmental Quality and the Oklahoma grain industry.

Sincerely,

Phil Kenkel

Phil Kenkel
Extension Economist

bes
enclosures

cc:
Debbie Perry
Adam Kemmerly
Punk Bonner
William Fishback
Meribeth Slagell
OGFA-Grain Dust Taskforce

Oklahoma State University, U. S. Department of Agriculture, State and Local Governments cooperating. Oklahoma Cooperative Extension Service offers its programs to all eligible persons regardless of race, color, national origin, religion, sex, age or disability and is an Equal Opportunity

October 21, 1994

AE#-9453

Results
Grain Elevator Dust Emission Study

Conducted by Oklahoma State University
Division of Agricultural Sciences and Natural Resources
in Conjunction with
Oklahoma Department of Environmental Quality and
Oklahoma Grain and Feed Association Task Force

Phil Kenkel
Extension Economist-Agribusiness

Ron Noyes, P.E.
Extension Agricultural Engineer

Background

The 1990 Clean Air Act required state environmental agencies, including the Oklahoma Department of Environmental Quality, to develop permit programs for a variety of industries, including the grain handling industry. This process involves the use of emission factors for grain elevator operations. The emission factors are an integral and important part of the determination of grain elevators' "potential to emit" airborne dust and in the calculation of operating fees. Unless they obtain a minor source permit from the state regulatory authority, firms with a potential to emit over 100 tons/year are classified as major source polluters and fall under federal EPA permitting process.

The implementation of the permitting process in Oklahoma highlighted an urgent need for accurate emission factors which are representative of typical Oklahoma grain elevators. The only existing source of emission factors for grain elevators is the EPA's AP-42 document. Examinations of the research methods used to develop the estimates in the AP-42 document along with the analysis of other available data caused the Oklahoma Grain and Feed Association task force, Oklahoma Department of Environmental Quality representatives, and members of the Oklahoma Air Quality Council to become concerned that the existing AP-42 emissions estimates were seriously flawed and overstated. (This same concern is being mirrored at the national level, as evidenced by negotiations between the National Grain and Feed Association and Federal EPA during a meeting in Raleigh, N.C. on Aug. 29, 1994.) The use of overstated emissions estimates would result in unnecessary operating restrictions, major investments in emission control equipment, and excessive annual emission fees.

Due to the concern over the existing emission factors and the critical need for accurate data, a team of faculty from the OSU Division of Agricultural Sciences and Natural Resources proposed a grain dust emission study from which accurate, representative, and scientifically defensible emission factors could be developed. This proposal was formally made to the Oklahoma Air Quality Council and the Oklahoma Department of Environmental Quality during a Grain and Feed Industry/Air Quality Council-Grain and Feed Industry Committee meeting on May 31, 1994. The Oklahoma Air Quality Council and Oklahoma Department of Environmental Quality

subsequently accepted the concept of a grain dust emission study. During the June 14th AQC meeting the Oklahoma DEQ, Oklahoma AQC, and grain industry task force agreed to the text for a grain industry subchapter of the Oklahoma Clean Air Act. The grain industry sub-chapter specified that the existing AP-42 emission estimates for receiving and loading would be used as interim values for a period not to exceed one year, during which time a grain dust emission study would be conducted to develop permanent emission factors. The sub-chapter was formally passed by the AQC on June 14th, 1994 and subsequently passed by the DEQ Board on September 28, 1994. The final protocol for the test was submitted to the Oklahoma DEQ and AQC by the OSU faculty team on September 16, 1994. The protocol was reviewed by DEQ staff and formally accepted on September 20, 1994.

Study Objectives

The primary objective of the study was to capture and measure the amount of grain dust emitted during typical receiving and load-out processes of a country elevator. The receiving study was sub-divided into three parts to investigate the impact of truck type (hopper-bottomed versus end-dump) on dust emissions and to determine the efficiency of dump-pit baffles in reducing dust emissions at receiving. Dump pit baffles were included in the study due to the lack of any existing efficiency estimates for this fairly low cost emission control. The formal objectives of the study were:

I. Capture and measure the amount of grain dust emitted (per ton of grain handled) during the receiving process of a typical Oklahoma elevator;

II. Capture the amount of grain dust emitted (per ton of grain handled) during the truck load-out process of a typical Oklahoma elevator;

III. Measure the impact of dump-pit baffles on grain dust emissions from receiving operations; and

IV. Determine the impact of truck type (end-dump versus hopper bottomed) on dust emissions at receiving.

Test Site Selection

The proposed procedure for measuring the emitted dust required a country elevator facility with an enclosed dump-shed that could be adequately sealed. The need for an efficiency estimate for dump-pit baffles also required that the facility have a removable baffle system in place. A list compiled by the Oklahoma Grain and Feed Association indicated that four country elevator facilities located in Omega, Dacoma, and Alva had enclosed dump-pits equipped with dust control baffles. After a tour of the facilities, the Wheeler Brothers Elevator in Alva, Oklahoma was selected. This elevator was selected because it was the only facility in which the dump-pit baffles could be easily removed so that tests could be conducted with and without the baffle

system. (In the other elevators the dust control baffles were permanently welded or otherwise permanently secured.)

Test Procedures

Overview

The basic format of the receiving and load-out tests involved unloading or loading trucks containing a known amount of grain in a specially modified enclosed dump shed. A 7.5 h.p. centrifugal blower mounted outside the dump shed was used to evacuate the dust laden air from the shed through a set of fabric bag filters. The air movement generated by the centrifugal blower helped to keep all of the airborne particles in suspension until they reached the 13" diameter inlet pipe, positioned near the center of the dump shed, which exhausted to the filter bags. Two additional high volume propeller fans were stationed in the shed (see Figure 1) and operated during the test to simulate a 12-15 m.p.h. wind through the dump shed. These fans helped to further ensure that all of the small, light weight dust particles remained in suspension.

Dump Shed

The enclosed driveway portion of the concrete dump shed in which the test was conducted has a total volume of approximately 24,000 cu. ft. The dump shed had full height driveway doors on the east and west ends. A small office was located to the south of the dump shed area and was separated by a door. A man-lift access area was located along the north of the dump pit. A temporary plywood partition was constructed to separate the dump pit area from this access area. A 13 inch diameter steel air duct was routed through the plywood partition with the inlet positioned approximately 7' high and directly above the dump pit unloading point. The duct routed the dust laden air from the enclosed driveway area to the centrifugal blower and filter bag assembly which were mounted in the man-lift access area. All minor cracks between the plywood partition, the ducting, and the concrete walls were sealed with duct tape or other sealing material. The only air inlet into the enclosed driveway area of the shed was the small gaps around the truck doors on the east and west ends of the shed. The negative pressure generated by the 7.5 h.p. blower ensured that no dust escaped from these cracks. The primary air flow was around the doors, across and over the grain dump pit, and up to the outlet duct.

A small door was constructed in the plywood partition to allow the truck driver to exit the dump shed after loading or unloading processes were completed and to allow the test supervisors to monitor the test without disturbing the outer doors. The partition was also equipped with a plexiglass window which allowed test personnel to observe the test without entering the enclosed shed.

Dump-pit

The dump pit grate had a surface area of approximately 64 sq. ft. (8′ by 8′) and a depth of 12 ft. In order to simulate typical operating conditions the receiving test began with the pit empty and the elevator leg operating before and during the time the grain was being unloaded into the pit. The dump pit was equipped with removable dust control baffles (see Figure 2) which were designed to partially restrict dust laden air from leaving the dump pit. When all of the baffles were positioned in the fully closed position, approximately 14% of the surface area of the dump grate was open. During the receiving operation the baffles directly under the grain swung open allowing the grain to flow through, and generating additional open area. The dump pit baffles were removed for the initial receiving tests which involved both hopper-bottomed and end-dump trucks and were re-installed for the baffle efficiency test. The dump pit was equipped with a pneumatic dust control system but, this system was not operated during the test procedures.

Blower and Filter Bags

The outlet from the 7.5 h.p. centrifugal blower was attached to three, 6″ diameter by 12′ long high efficiency fabric bag filters through a specially constructed manifold. The blower provided approximately 2,400-2,500 c.f.m. which allowed for a complete air exchange of the dump shed in approximately 10 minutes. The blower was started when the grain unloading or loading process began and was operated for a sufficient amount of time to create 1 1/2 to 2 air exchanges for the dump shed area. During the test, manometer readings were taken periodically (Appendix 1) to measure the differential pressure across the blower. These measurements, along with the manufactures fan curve for the blower (Figure 3) were used to calculate the actual airflow through the filter bags.

The fabric filter bags and end clamps were weighed before each test to establish a tare weight. The bags were reweighed at the completion of each test to determine the amount (lbs.) of dust captured. After each test was completed and the bags had been weighed, the clamps were removed from the end of the bags and the bags were cleaned by exhausting air from the centrifugal blower through the bags with the ends opened. Periodically during the two day testing period, when the manometer readings indicated that the static pressure readings were increasing, one filter bag was replaced with a new, or hand-cleaned bag, prior to the next test.

Trucks

Two truck types, a hopper-bottomed semi-trailer and an end-dump tandem axle truck, were used during the open dump-pit (baffles removed) receiving test. Each truck had a capacity of approximately 17-18 tons (34,000-36,000 lbs). The unloading opening of the tandem end-dump truck started 4′ 11" above the dump pit grate and ended up 2′ 11" when the truck bed was in the fully raised position. The hopper bottom semi-trailer dump gate height was 17 3/4" above the dump grate. The trailer was equipped with three 15 3/4" by 10", air operated, rack and pinion slide gates which were fully opened during each receiving test. The end-dump truck had two slide gate openings, each 7" high by 15" wide, which were fully opened during each test.

Load Out Spout

The discharge spout in the dump-shed was of a fixed height design and was approximately 6 ft. above the bottom of the truck bed. The spout was in line with the inlet pipe to the centrifugal blower. Each load-out test took approximately 6 1/2 minutes, indicating an effective load-out speed of 5,700 bu./hr (170.8 tons/hr.).

Number of Truck Loads

Five loads from each truck type were used during the open dump-pit receiving study. The truck types were alternated during the test to prevent down time while the truck was being weighed, loaded, and re-weighed. The truck type was recorded for each test and all of the results were separated by truck type.

The baffle efficiency study involved an additional five loads from the tandem end-dump truck. The tandem end-dump represented the worst case scenario in terms of dust emitted and therefore, provided a conservative estimate of the baffle efficiency. All of the procedures for the baffle efficiency test were identical to the open dump-pit test. A ratio of the average amount of dust (lbs./ton) emitted from the tandem end-dump truck with and without the baffles installed was calculated to determine the efficiency of the dump-pit baffles.

Five truck loads with the tandem end-dump truck were used for the load-out study. Since the truck heights of the hopper bottom and end-dump trucks were almost identical, the load out results would not be expected to vary significantly with truck type.

Weights

Each truck load of wheat was weighed on the elevator scale which had a current certification. The filter bags and clamps were weighed on a Class I laboratory scale provided by the Oklahoma State Department of Agriculture, Weights and Measures Division. The scale provided (which is used by weights and measures inspectors to certify scales at commercial facilities) had an accuracy of + or - 1/1000 lb. Mr. Charles Carter, Oklahoma Department of Agriculture, Weights and Measures, set-up, leveled and calibrated the scale, and performed the weighing for the receiving end-dump and receiving hopper bottom tests. Dr. Phil Kenkel, OSU Agricultural Economics conducted the weighing for the baffle efficiency and load-out tests conducted on the second day.

Supplemental Tests

Two supplemental tests were conducted in conjunction with the primary receiving, load-out, and baffle efficiency tests. An "extra fan time" test was conducted to determine the impact of additional dump shed evacuation on the amount of dust collected. This test was conducted in conjunction with the last end-dump truck load of the receiving study. The filter bags were weighed after the fan had been run for the standard 20 minute interval. The bags were then re-attached to the fan (without being emptied) and the fan was run an additional 20 minutes. The bags were then re-weighed to determine the additional dust captured by doubling the fan time and air volume. The elapsed time between fan shut off and re-start was 3 minutes, 10 seconds.

The second supplemental test was the measurement of the non-airborne dust which settled on the floor during the standard receiving, receiving with baffles installed, and load-out tests. The dump shed was completely swept prior to each test. After the shed had been evacuated for the designated 20 minute time, the dust which settled to the floor was swept up and weighed. The collection of the floor dust occurred before the doors of the shed were opened. Since the samples of "floor dust" also contained whole and partial kernels of grain spilled during the loading and unloading processes, the samples were saved for sieving and/or particle size analysis. In addition, an open door "reference" test was conducted to determine the amount of floor dust which would be expected to be recovered during normal (OSHA mandated) housekeeping procedures. This "reference level" was determined by sweeping up and measuring the amount of dust which fell to the floor of the dump shed when trucks were unloaded with both doors to the shed open, and the outside winds flowing through the shed.

Table 1
Summary of Emission Test Design

Test Number	Purpose	Truck Type	# Loads	Avg. Load Weight (tons)	Avg. Unloading or loading time	Time of fan run
1	Receiving	End-dump	5	18.15	3.5	20 min
1	Receiving	Hopper bottom	5	17.63	1.5	20 min*
2	Baffle	End-dump	5	18.46	3.5	20 min
3	Load out	End-dump	5	18.50	6.5	20 min

* The first two repetitions for the hopper bottom truck used a fan time of 15 minutes since the dump shed was free of visible dust after that period of time. The fan time for the remainder of the tests were increased to 20 minutes after analysis of the preliminary manometer readings and calculated airflows.

Supplementary Tests

S1	Extra fan time	End-dump	1	18.15	3.5	20 min
	Non-airborne dust (floor dust)* estimates					
S2	Receiving (no baffles)	End-dump	5	18.15	3.5	20 min
S2	Receiving (no baffles)	Hopper bottom	5	17.63	1.5	20 min
S2	Receiving (baffles)	End-dump	5	18.46	3.5	20 min
S2	Receiving open door reference level	End-dump	4	18.33	3.5	NA
S2	Load out	End-dump	5	18.50	6.5	20 min

*Performed concurrently with receiving and load-out studies.

RESULTS

Airflow

The average total airflow through the filter bags (Table 2) for each test/truck combination ranged from 43,914 ft^3 to 49,092 ft^3 (1.83 to 2.05 times the air volume of the dump shed). Analysis of the individual airflow and dust collection results provided ample evidence that the air volume was sufficient to capture all airborne dust.

First, results of the extra fan time test run in conjunction with the receiving study indicated that moving an additional 46,566 ft^3 (1.94 times the dump shed volume) through the filter bags resulted in an insignificant increase (.0009 lbs./ton) in the amount of dust collected. This indicated that more than doubling the air volume increased the amount of dust collected by only about 2%.

Second, a statistical analysis (linear regression) was performed to determine if there was any significant relationship between the amount of dust collected from each truck load of each test and the amount of air moved through the filter bags for that test. The results indicated no statistically significant positive relationship between airflow and dust collected for any of the receiving or load out studies.

Table 2
Total Calculated Airflow (ft^3) Through the Filter Bags*

	Receiving-hopper bottom	Receiving-end-dump	Receiving-baffle	Load-out	Extra fan time test
Load #1	37,542	47,928	46,108	50,490	
Load #2	37,409	47,732	45,839	48,820	
Load #3	48,082	41,670	47,004	50,644	
Load #4	47,683	44,463	46,150	47,424	
Load #5	48,853	46,500**	48,856	48,082	46,566**
Average	43,914	45,658	46,191	49,092	46,566

* Calculated from static pressure observations (inches of water column) taken by periodic (2-4 minute interval) manometer readings and the manufacture's fan curve (Figure 3).
** Extra fan time test conducted after completion of normal procedures for #5 end-dump load.

Grain Quality

Each truck load of wheat used for the test was officially sampled and graded by Enid Grain Inspection Service (licensed under the United States Grain Standard Act). Grain grades are a function of a number of variables including test weight (the density of the kernels, lbs/bu.), the percentage of foreign material (FM), shrunken and broken kernels (SB), damaged kernels (DK), and other factors. The grading standards provide lower limits for test weight and upper limits for all of the other factors. Any one grading factor can lower the final grade. For example, a low test weight would lower the final grade, regardless of the FM, SB, DK, and other factors. Wheat quality is affected by environmental conditions. The quality of wheat received by a particular elevator varies from year to year with the local growing and harvesting conditions.

The amount of dockage in the grain and the moisture content are not grade factors but, are recorded on the official grade sheet. Dockage in wheat is defined as *"all material other than the wheat which can be removed from the sample by use of an approved device according to procedures prescribed in FGIS instructions. Also, underdeveloped, shriveled, and small pieces of wheat kernels removed in properly separating the material other than wheat and that cannot be recovered by properly re-screening or recleaning."* (Federal Grain Inspection Service, Grain Inspection Handbook, 13.14). In simple terms, dockage consists of material either larger than or smaller than the average sized wheat kernel which can be separated by screening procedures. The most typical form of dockage in Oklahoma wheat is chess seeds. Chess seeds are about the same size as wheat kernels, but are lighter than wheat and have a more pointed appearance (OSU Cooperative Extension Circular E-920).

None of the grade and non-grade factors listed on the official grade sheet directly measures the amount of dust in the grain. The most relevant factors would probably be the amount of dockage, SB and FM. Since dockage represents both small and large material, it may or may not relate to grain dustiness. For example, chess seeds and large feed pellets in wheat would function as dockage. Shrunken, broken and underdeveloped wheat kernels, can officially function as either SB or dockage depending on where they lay after the grain is screened using official procedures. Most of the material removed during the official SB screening procedures is typically too large to become airborne. However, some portion of this material could be small enough to affect wheat dustiness. Foreign material represents any material other than wheat which is hand picked from a 30g. sample which has previously been screened for dockage and SB. Examples of foreign material in wheat would include corn, feed pellets the same size as wheat kernels, stones, weed seeds, dirt, and any unidentified substances. Most material hand separated as FM is not small enough to be considered grain dust since the fine materials have been previously removed in the dockage and SB screening procedures.

The official grades and relevant grade factors for the test samples are provided in Table 3. A five year average of quality factor data for hard red winter wheat is provided in Table 4. The grain used in the test appears to be representative of hard red winter wheat grown in Oklahoma. The test grain had virtually the same test

weight as the FGIS 5 year average. The test grain had a lower amount of FM and dockage relative to the FGIS 5 year average, and slightly less SB.

Table 3
Summary of Grain Quality

Load #	Test weight	Moisture	FM	SB	Dockage	Grade
Receiving-End-dump #1	60.5	12.0	0	1.8	.3	1
Receiving-Hopper #1	60.4	12.0	0	2.2	.3	1
Receiving-End-dump #2	60.3	12.2	.1	1.5	.4	1
Receiving Hopper #2	60.2	12.0	.1	1.4	.4	1
Receiving-End-dump #3	60.7	11.8	.1	1.4	.3	1
Receiving-Hopper #3	60.7	11.9	0	1.2	.2	1
Receiving-End-dump #4	60.2	12.1	.1	1.5	.4	1
Receiving-Hopper #4	60.3	12.0	.1	1.5	.4	1
Receiving-End-dump #5	60.2	12.2	.1	1.5	.4	1
Receiving-Hopper #5	60.5	12.2	.1	1.3	.3	1
Baffle #1	59.8	11.7	.1	1.8	.4	2
Baffle #2	60.1	11.1	0	1.6	.5	1
Baffle #3	60.0	11.3	0	1.9	.5	1
Baffle #4	60.9	11.7	0	1.2	.3	1
Baffle #5	61.0	11.9	.1	1.1	.3	1
Load-out #1	60.0	11.7	.1	2.4	.8	1
Load-out #2	60.3	11.9	.1	1.7	.6	1
Load-out #3	61.2	12.1	0	1.3	.3	1
Load-out #4	59.9	12.1	.1	1.6	.4	2
Load-out #5	59.9	12.1	.1	1.6	.4	2
Average	60.35	11.9	.07	1.58	.44	--

Based on official sampling and grading by Enid Grain Inspection Service

Table 4
Federal Grain Inspection New Crops Survey Data Summary for Hard Red Winter Wheat 1986 through 1990 Crops versus Test Wheat

	Test Weight	FM	SB	Dockage
FGIS New Crop Average	60.3	.33	1.98	.86
Test Wheat	60.35	.07	1.58	.44

Source-OSU Cooperative Extension Service Bulletin E-920

Dust Emission Estimates

The calculated dust emissions (amount of dust captured per ton of grain handled) are provided in Table 5. The average amount of dust collected during the receiving study was .0191 lbs./ton for the hopper bottom truck and .0388 for the end-dump truck for an overall average of .029 lbs./ton. The dust control baffles reduced the amount of dust collected by 20.9%. The amount of dust collected during load-out was .0084 lbs./ton. A comparison of the calculated dust emissions with the existing AP-42 emission factors is provided in Table 6.

The emission data for each test was consistent across the various repetitions. The receiving dump pit baffle test and the hopper bottom tests demonstrated the least load-to-load variations, while the receiving end-dump truck tests had the most variation. All of the tests resulted in fairly tight confidence intervals around the averages[1]. The results indicated that the hopper bottom truck had approximately half (49.22%) the dust emissions of the end-dump truck.

The dump bit baffle design used in this test were installed about 4-5 years ago. They are one of a variety of baffle designs developed by millwrights in the Oklahoma region. More efficient designs are available that are reported to have higher efficiency compared to the baffles tested at this elevator.

---

[1] A 90% confidence interval indicates that, based on the variations within the sample, there is a 90% probability that the true average from repeating the experiment an infinite number of time would fall within the confidence limits.

Table 5
Summary of Airborne Dust Collected (lbs./ton)

	Receiving Hopper Bottom	Receiving End-dump	Receiving baffles	Load-out
Load 1	.0172 L	.0308	.0284	.0051 L
Load 2	.0193	.0273 L	.033	.0071
Load 3	.0181	.0537 H	.0308	.0077
Load 4	.0219 H	.0430	.0305	.0101
Load 5	.0190	.0393	.031	.0122 H
Average	**.0191**	**.0388**	**.0307**	**.0084**
Std. Dev.	.0016	.0093	.0015	.0025
Lower 90% confidence limit	.0175	.0295	.0293	.006
Upper 90% confidence limit	.0207	.0482	.0322	.0109
Receiving-Overall Average	**.029 lbs/ton**			
Baffle Efficiency	20.9%			

Table 6
Comparison of Dust Collected with AP-42 Emission Factors (lbs./ton)

	Receiving			Loading
	Hopper Bottom	End Dump	Overall	
Dust Collected	.0191	.0388	.029	.0084
AP-42 Emission Factor	.60			.3

note in OK AQD during discussion with industry

Results-Supplementary Non-airborne Dust

While not part of emission estimates, results on the amount of non-airborne dust which settled to the floor during each test provide useful indications of the approximate amount of grain dust which becomes separated from the grain flow during the handling process. The impact of truck type and baffles on the amount of non-airborne dust has important implications for elevator housekeeping procedures and worker safety. These results also support the contention that the original AP-42 emission estimates were grossly overstated since the total amount of airborne and non-airborne (settled) dust collected during the receiving tests was 7-11 times less than the AP-42 receiving emission factor.

The amount of non-airborne (settled) floor dust collected ranged from .0697 lbs/ton for the receiving/end-dump truck test to .0055 lbs./ton for the load-out test (Table 7). Table 7 also contains estimates of the portion of the settled dust which would be expected to be collected during normal (OSHA mandated) housekeeping procedures. These amounts were determined by measuring the average amount of dust which was gathered from the floor when the end-dump truck was unloaded using normal dumping procedures, i.e with both dump shed doors open. In the open-door receiving (reference) test the amount of dust normally recovered from the dump pit floor during housekeeping procedures averaged .0208 lbs./ton.

The results indicated that the dump pit baffles were more effective in limiting non-airborne dust than in limiting airborne dust. While reducing airborne dust by 20.9%, the baffles reduced the amount of dust collected on the floor by over 52%. The overall efficiency of the dump pit baffles in limiting both airborne and non-airborne dust was 39.17%.

Table 7
Supplementary Results
(Non-Airborne) Floor Dust Collected (lbs./ton)

	Receiving-Hopper bottom	Receiving-End-dump	Receiving Baffles	Load-out
Floor Dust Collected	.0333	.0488	.0257	.0040
Floor dust recovered during normal housekeeping*	.0142**	.0208	.0100**	.0017**
Floor dust adjusted for dust recovered during normal housekeeping	.0191	.0280 add to airborne	.0157	.0023
Baffle efficiency-floor dust	52.89% for total			
Baffle efficiency-Floor Dust and Airborne Dust	39.17%			

* Amount of dust swept up from floor after end-dump truck was unloaded with all dump shed doors open. Data conducted for end-dump receiving test only. Dust was screened with a coarse (Standard #16) sieve to remove wheat kernels, stones (and in the case of one sample, a broken bolt).

** Estimated based on the same ratio of dust collected in housekeeping procedures to total floor dust as the end-dump receiving test.

← ADJ. FACTORS

LIST OF FIGURES

1. Figure 1-Dump Shed Diagram
2. Figure 2-Dump Pit Baffle Design
3. Figure 3-Fan Curve for Centrifugal Blower #2075

ATTACHMENTS

1. Appendix 1-Air Measurement Data Sheets
2. Appendix 2-Dust and Truck Weights Data Sheets
3. Appendix 3-Official Summary of Grades-Enid Inspection Service
4. Appendix 4-Copies of Truck Scale Tickets
5. Appendix 5-Official Test Protocol (9-17-94)

References

Adam, B. D. and K. B. Anderson. "Costs and Benefits of Cleaning Hard Red Winter (HRW) and Soft Red Winter (SRW) Wheats." Bulletin E-920, Cooperative Extension Service, Division of Agricultural Sciences and Natural Resources, Oklahoma State University, October, 1992.

USDA Federal Grain Inspection Service. Grain Inspection Handbook II: Grain Grading Procedures, 10-1-90.

Figure 1. Dump Shed Layout

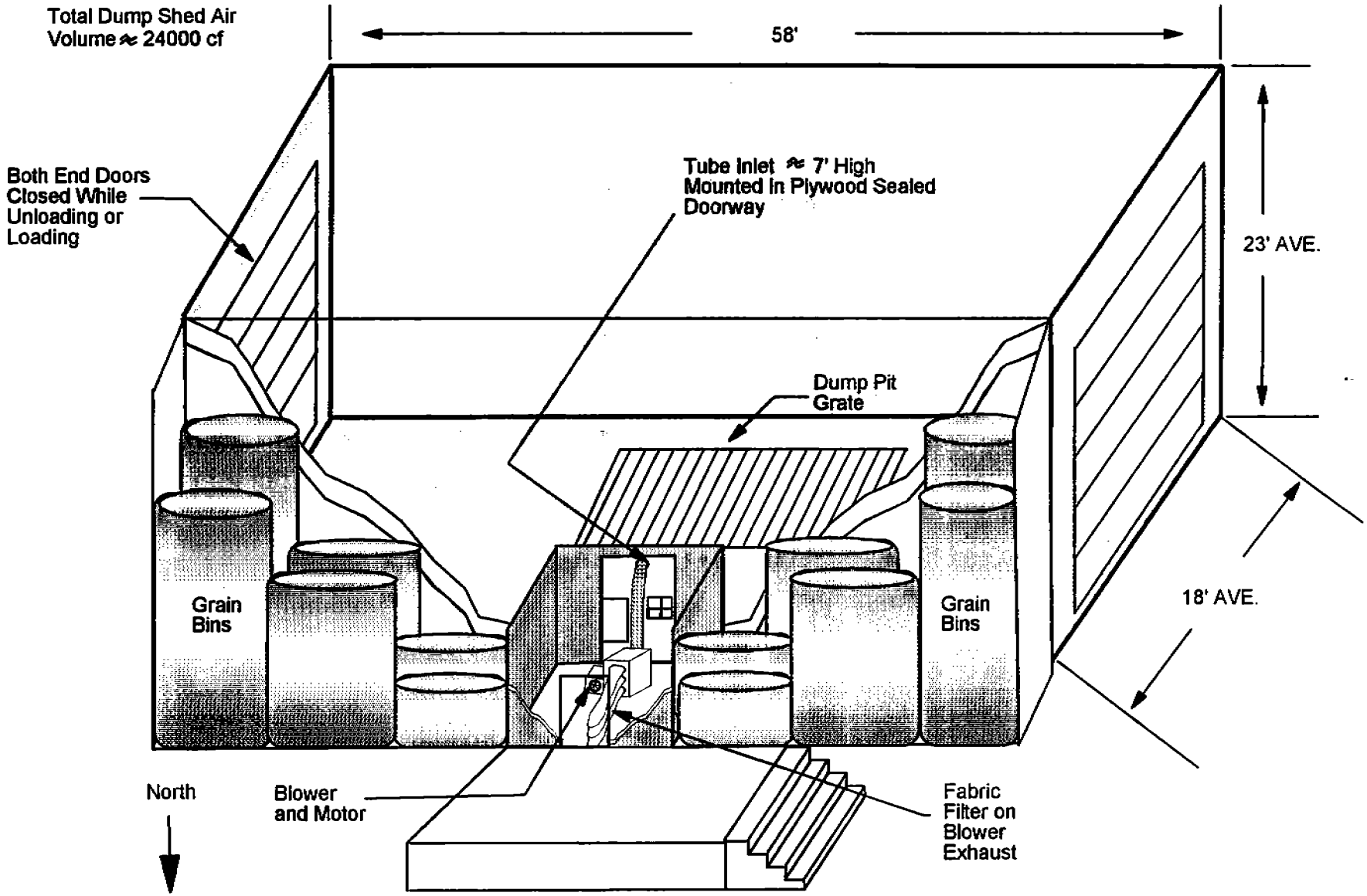

Predicted Airflow Pattern: Under Dump Shed Doors, Over Pit and Up Into Inlet Tube

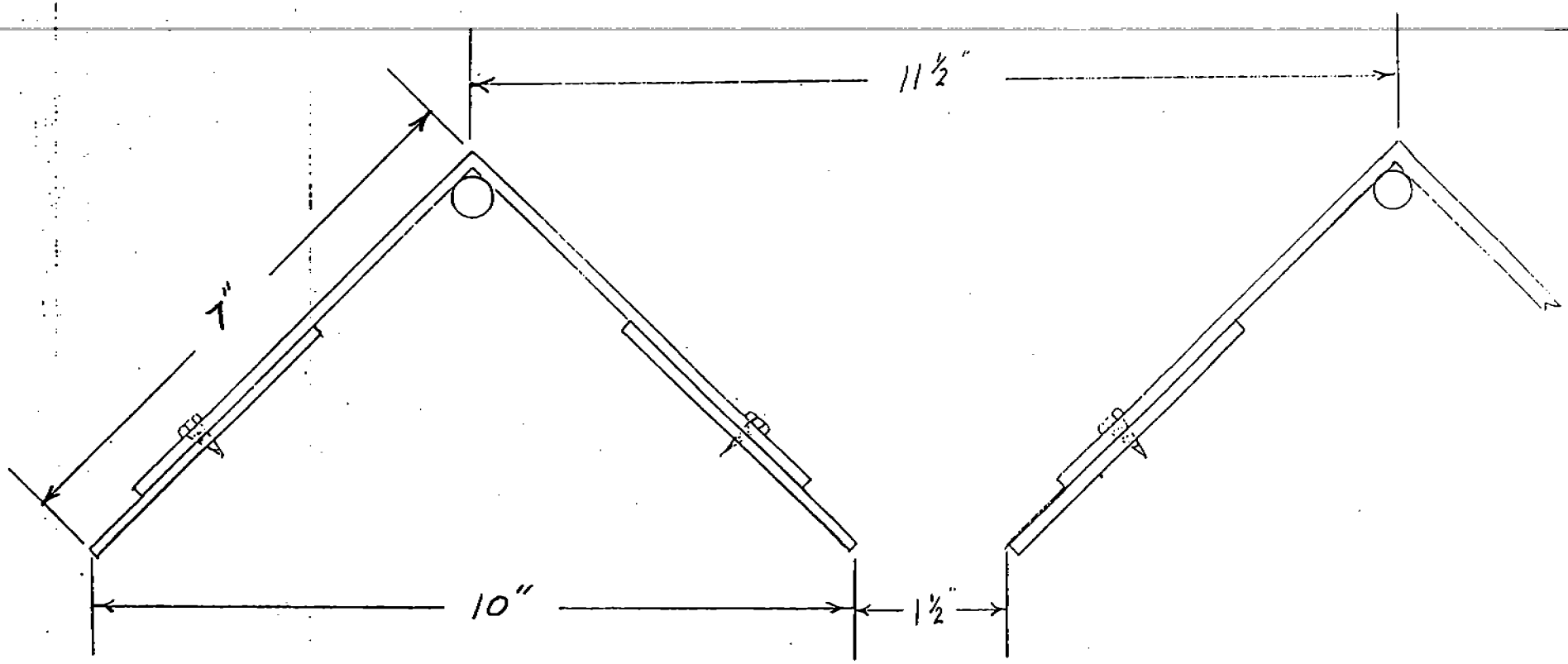

DUMP PIT HAS 10 BAFFLES CONFIGURED AS SHOWN FOR TOTAL OF 14.2% OPEN AREA.

BAFFLE DESIGN

WHEELER BROS. ELEVATOR
ALVA, OK

AUG 23, 1994

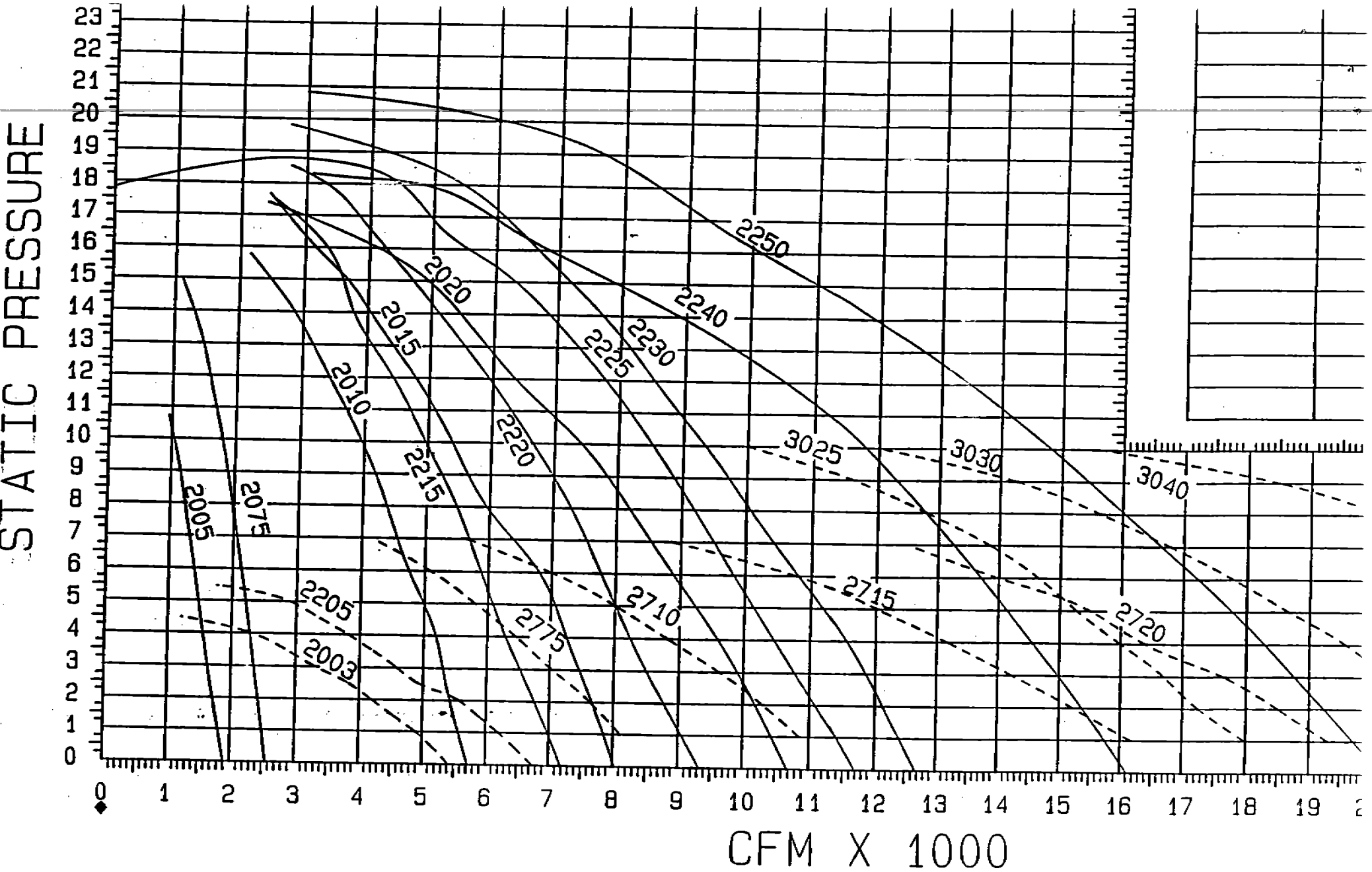

LEGEND
1750 RPM - - - - - - - - - - - -
3450 RPM ————————

GEORGE A. ROLF

ROLFES
CENTRIFUGAL FAN C

Appendix 1

Receiving/Loadout Grain Dust Emission Study
Airborne Dust Recovery Airflow Data

Wheeler Brothers Elevator
Alva, OK - - 9/26/94

Field Test Protocol Developed/Administered
by
R.T. Noyes, P.E., Extension Agricultural Engineer
&
Phil Kenkel, Ph.D., Extension Agricultural Economist
Oklahoma State University, Stillwater, OK

RECEIVING Study

Weather: Sunny and Mild, Light Winds

Open Dump Pit [No Baffles]; 7.5 HP Rolfes Centrifugal Blower w/13" ID Suction Pipe from Sealed Dump Shed; Blower Outlet Manifolded to three 6 inch Dia. x 12 ft. High Eff. Bag House Filters

Test No.	Truck Description	Time	Elapsed Time [min.]	Static Pressure [inches water col.]	Airflow [cfm]
1	Hopper Bottom	9:36:52	0	0	2570
	[Dump Time 1.5 minutes]	9:40:52	4	0.6	2528
		9:51:52	15	1.8	2444
2	Tandem End-Dump	10:21:58	0	0	2570
	[Dump Time 3.5 minutes]	10:25:58	4	1.2	2486
		10:28:58	7	2.0	2430
		10:31:58	10	3.0	2360
		10:35:58	14	3.5	2325
		10:41:58	20	3.8	2304
3	Hopper Bottom	11:07:48	0	0	2570
	[Dump Time 1.5 minutes]	11:12:48	5	0.7	2521
		11:17:48	10	1.6	2458
		11:20:48	13	1.8	2444
		11:22:48	15	1.9	2437
4	Tandem End-Dump	11:41:30	0	0	2570
	[Dump Time 3.5 minutes]	11:45:30	4	1.0	2500
		11:47:30	6	2.1	2423
		11:50:30	9	3.1	2353
		11:56:30	15	3.7	2311
		12:01:30	20	3.9	2297
5	Hopper Bottom	12:33:30	0	0	2570
	[Dump Time 1.5 minutes]	12:37:30	4	1.5	2465
		12:40:30	7	2.3	2409
		12:44:30	11	2.8	2374
		12:48:30	15	3.2	2346
		12:53:30	20	3.4	2332
6	Tandem End-Dump	2:13:00	0	0	2570
	[Dump Time 3.5 minutes]	2:14:30	1.5	1.8	2444
		2:15:30	2.5	3.6	2318
		2:16:30	3.5	4.8	2234
		2:18:00	5	6.3	2126
		2:21:00	8	7.4	2038
		2:27:00	14	8.3	1966
		2:33:00	20	8.6	1942

RECEIVING Study [Cont'd]

Test No.	Truck Description	Time	Elapsed Time [min.]	Static Pressure [inches water col.]	Airflow [cfm]
7	Hopper Bottom [Dump Time 1.5 minutes]	2:54:00	0	0	2570
		2:57:00	3	0.8	2514
		2:59:00	5	1.9	2437
		3:01:00	7	2.5	2395
		3:04:00	10	3.2	2346
		3:09:00	15	3.7	2311
		3:14:00	20	3.9	2297
8	Tandem End-Dump [Dump Time 3.5 minutes]	3:43:20	0	0	2570
		3:45:20	2	1.4	2472
		3:46:20	3	2.6	2388
		3:47:20	4	3.5	2325
		3:48:20	5	4.2	2276
		3:50:20	7	5.0	2220
		3:54:20	11	6.0	2150
		4:03:20	20	6.7	2094
9	Hopper Bottom [Dump Time 1.5 minutes]	4:33:30	0	0	2570
		4:36:30	3	1.1	2493
		4:40:30	7	2.0	2430
		4:41:30	Adjusted Kinks in Filter Bags		
		4:42:30	9	2.0	2430
		4:48:30	15	2.3	2409
		4:53:30	20	2.3	2409
10	Tandem End-Dump [Dump Time 3.5 minutes]	5:26:50	0	0	2570
		5:30:50	4	0.8	2514
		5:32:50	6	2.6	2388
		5:34:50	8	3.8	2304
		5:38:50	12	4.8	2234
		5:40:50	14	5.0	2220
		5:44:50	18	5.4	2192
		5:46:50	20	5.4	2192

10 [Continued]

Weighed Filter Bags; Shook Dust Down to Bottom of Bags; Remounted Bags and Continued Test for 20 minutes before opening the Dump Shed and Moving Truck. Purpose of this test extension was to demonstrate that there was essentially no airborne dust in suspension after the initial 20 minutes of evacuation.

	5:50:00	20	4.0	2290
	5:52:00	22	4.2	2276
	5:53:00	Adjusted Kinks in Filter Bags		
	5:54:00	24	3.2	2346
	6:00:00	30	3.3	2339
	6:10:00	40	3.5	2325

RECEIVING Study [Cont'd]

Tuesday, September 27, 1994

Weather: Sunny and Mild, Light Winds

Modified Dump Pit With Dust Control Baffles; 7.5 HP Rolfes Centrifugal Blower w/ 13" ID Suction Pipe from Sealed Dump Shed; Blower Manifolded to three 6 in. Dia. x 12 ft. High Eff. Bag Filters

Test No.	Truck Description	Time	Elapsed Time [min.]	Static Pressure [inches water col.]	Airflow [cfm]
11	Tandem End-Dump	8:32:50	0	0	2570
	[Dump Time 3.5 minutes]	8:35:20	3	1.1	2493
		8:36:20	4	1.6	2458
		8:37:20	5	2.6	2388
		8:38:20	6	3.0	2360
		8:40:20	8	3.9	2297
		8:42:20	10	4.6	2248
		8:46:20	14	5.2	2206
		8:52:20	20	5.7	2171
12	Tandem End-Dump	9:21:45	0	0	2570
	[Dump Time 3.5 minutes]	9:24:45	3	1.1	2493
		9:25:45	4	2.2	2416
		9:26:45	5	2.8	2374
		9:27:45	6	3.5	2325
		9:28:45	7	4.0	2290
		9:30:45	9	4.6	2248
		9:32:45	11	5.1	2213
		9:37:45	16	5.4	2192
		9:41:45	20	5.7	2171
13	Tandem End-Dump	10:08:20	0	0	2570
	[Dump Time 3.5 minutes]	10:11:20	3	0.5	2535
		10:12:20	4	1.1	2493
		10:13:20	5	1.8	2444
		10:14:20	6	2.4	2402
		10:16:20	8	3.2	2346
		10:18:20	10	3.8	2304
		10:22:20	14	4.5	2255
		10:28:20	20	5.0	2220
14	Tandem End-Dump	11:02:10	0	0	2570
	[Dump Time 3.5 minutes]	11:05:10	3	0.7	2521
		11:06:10	4	1.7	2451
		11:07:10	5	2.4	2402
		11:08:10	6	3.0	2360
		11:09:10	7	3.6	2318
		11:10:10	8	4.0	2290
		11:12:10	10	4.5	2255
		11:16:10	14	5.2	2206
		11:22:10	20	5.8	2164
15	Tandem End-Dump	12:01:30	0	0	2570
	[Dump Time 3.5 minutes]	12:03:30	2	0.8	2514
		12:04:30	3	1.5	2465
		12:05:30	4	2.4	2402
		12:06:30	5	3.0	2360
		12:07:30	6	3.4	2332
		12:09:30	8	4.0	2290
		12:11:30	10	4.6	2248
		12:15:30	12	5.2	2206
		12:21:30	20	5.7	2171

LOADOUT Study

Tuesday, September 27, 1994

Weather: Sunny and Mild, Light Winds
Side Draw Bin Downspout to Center of Drive over Dump Pit; 7.5 HP Rolfes Centrifugal Blower on 13" ID Suction Pipe from Sealed Dump Shed; Blower Outlet Manifolded to three 6 inch Dia. x 12 ft. High Efficiency Bag House Filters

Test No.	Truck Description	Time [min.]	Elapsed Time [min.]	Static Pressure [inches water col.]	Airflow [cfm]
16	Tandem End-Dump [Load Time 6.5 minutes]	1:25:40	0	0	2570
		1:28:40	3	0.2	2556
		1:30:40	5	0.6	2528
		1:32:40	7	0.7	2521
		1:36:40	11	0.8	2514
		1:40:40	15	0.8	2514
		1:45:40	20	0.9	2507
17	Tandem End-Dump [Load Time 6.5 minutes]	2:10:0	0	0.8	2514
		2:12:0	2	1.0	2500
		2:16:0	6	1.5	2465
		2:20:0	10	1.9	2437
		2:24:0	14	2.3	2409
		2:30:0	20	2.5	2395
18	Tandem End-Dump [Load Time 6.5 minutes]	2:53:20	0	0	2570
		2:56:20	3	0.1	2563
		2:58:20	5	0.4	2542
		3:04:20	11	0.7	2521
		3:08:20	15	0.7	2521
		3:11:20	18	0.8	2514
		3:13:20	20	0.8	2514
19	Tandem End-Dump [Load Time 6.5 minutes]	3:43:0	0	0.7	2521
		3:44:0	1	1.0	2500
		3:46:0	3	1.6	2458
		3:50:0	7	2.6	2388
		3:54:0	11	3.4	2332
		3:58:0	15	3.7	2311
		4:03:0	20	3.8	2304
20	Tandem End-Dump [Load Time 6.5 minutes]	4:30:20	0	1.0	2500
		4:32:20	2	1.2	2486
		4:36:20	6	2.0	2430
		4:40:20	10	2.7	2381
		4:44:20	14	2.9	2367
		4:48:20	18	3.1	2353
		4:50:20	20	3.1	2353

NOTES:
1. Tandem truck dump height started approx. 5 ft. and ended at about 2.5 ft. above dump pit grate.
2. Hopper bottom semi-trailer dump height was approx. 2 ft. above dump pit grate.
3. Discharge spout height above the tandem hoist truck bed was approximately 6 ft.

END OF Test Data on Airflow

APPENDIX I-CONTINUTED-AIRFLOW CALCULATIONS

	Time	Static Pres	Fan Volume (CFM)	Airflow for Interval	Total Airflow	Average CFM
	0	0	2570			
	4	0.6	2528	10196		
Hopper Bottom #1	15	1.8	2444	27346	37542	2502.8
	0	0	2570			
	4	1.2	2486	10112		
	7	2	2430	7374		
	10	3	2360	7185		
	14	3.5	2325	9370		
End Dump #1	20	3.8	2304	13887	47928	2396.4
	0	0	2570			
	5	0.7	2521	12728		
	10	1.6	2458	12448		
	13	1.8	2444	7353		
Hopper Bottom #2	15	1.9	2437	4881	37409	2493.9
	0	0	2570			
	4	1	2500	10140		
	6	2.1	2423	4923		
	9	3.1	2353	7164		
	15	3.7	2311	13992		
End Dump #2	20	3.95	2294	11513	47732	2386.6
	0	0	2570			
	4	1.5	2465	10070		
	7	2.3	2409	7311		
	11	2.8	2374	9566		
	15	3.2	2346	9440		
Hopper Bottom #3	20	3.4	2332	11695	48082	2404.1
	0	0	2570			
	1.5	1.8	2444	3760.5		
	2.5	3.6	2318	2381		
	3.5	4.8	2234	2276		
	5	6.3	2126	3270		
	8	7.4	2038	6246		
	14	8.3	1966	12012		
End Dump #3	20	8.6	1942	11724	41670	2083.5
	0	0	2570			
	3	0.8	2514	7626		
	5	1.9	2437	4951		
	7	2.5	2395	4832		
	10	32	2346	7111.5		
	15	3.7	2311	11643		
Hopper Bottom #4	20	3.9	2297	11520	47683	2384.2
	0	0	2570			
	2	1.4	2472	5042		
	3	2.6	2388	2430		
	4	3.5	2325	2356.5		
	5	4.2	2276	2300.5		
	7	5	2220	4496		
	11	6	2150	8740		
End Dump #4	20	6.7	2094	19098	44463	2223.2

APPENDIX I-CONTINUTED-AIRFLOW CALCULATIONS

	Time	Static Pres	Fan Volume (CFM)	Airflow for Interval	Total Airflow	Average CFM
	0	0	2570			
	3	1.1	2493	7594.5		
	7	2	2430	9846		
	9	2	2430	4860		
	15	2.3	2409	14517		
Hopper Bottom #5	20	2.35	2405	12035	48853	2442.6
	0	0	2570			
	4	0.8	2514	10168		
	6	2.6	2388	4902		
	8	3.8	2304	4692		
	12	4.8	2234	9076		
	14	5	2220	4454		
	18	5.4	2192	8824		
End Dump #5	20	5.4	2192	4384	46500	2325.0
	20	4	2290			
	22	4.25	2272	4562		
	24	3.25	2342	4614		
	30	3.3	2339	14043		
Extra Fan Time	40	3.5	2325	23320	46539	2327.0
	0	0	2570			
	3	1.1	2493	7594.5		
	4	1.6	2458	2475.5		
	5	2.6	2388	2423		
	6	3	2360	2374		
	8	3.9	2297	4657		
	10	4.6	2248	4545		
	14	5.2	2206	8908		
Baffle #1	20	5.7	2171	13131	46108	2305.4
	0	0	2570			
	3	1.1	2493	7594.5		
	4	2.2	2416	2454.5		
	5	2.8	2374	2395		
	6	3.5	2325	2349.5		
	7	4	2290	2307.5		
	9	4.6	2248	4538		
	11	5.1	2213	4461		
	16	5.4	2192	11013		
Baffle #2	20	5.7	2171	8726	45839	2291.9
	0	0	2570			
	3	0.5	2535	7657.5		
	4	1.1	2493	2514		
	5	1.8	2444	2468.5		
	6	2.4	2402	2423		
	8	3.2	2346	4748		
	10	3.8	2304	4650		
	14	4.5	2255	9118		
Baffle #3	20	5	2220	13425	47004	2350.2
	0	0	2570			
	3	0.7	2521	7636.5		

APPENDIX I-CONTINUTED-AIRFLOW CALCULATIONS

	Time	Static Pres	Fan Volume (CFM)	Airflow for Interval	Total Airflow	Average CFM
	4	1.7	2451	2486		
	5	2.4	2402	2426.5		
	6	3	2360	2381		
	7	3.6	2318	2339		
	8	4	2290	2304		
	10	4.5	2255	4545		
	14	5.2	2206	8922		
Baffle #4	20	5.8	2164	13110	46150	2307.5
	0	0	2570			
	2	0.8	2514	5084		
	3	1.5	2465	2489.5		
	4	2.4	2402	2433.5		
	5	3	2360	2381		
	6	3.4	2332	2346		
	8	4	2290	4622		
	10	4.6	2248	4538		
	12	5.2	2206	4454		
Baffle #5	20	5.7	2171	17508	45856	2292.8
	0	0	2570			
	3	0.2	2556	7689		
	5	0.6	2528	5084		
	7	0.7	2521	5049		
	11	0.8	2514	10070		
	15	0.85	2510	10048		
Load-out #1	20	0.85	2510	12550	50490	2524.5
	0	0.8	2514			
	2	1	2500	5014		
	6	1.5	2465	9930		
	10	1.95	2434	9798		
	14	2.35	2405	9678		
Load-out #2	20	2.5	2395	14400	48820	2441.0
	0	0	2570			
	3	0.1	2563	7699.5		
	5	0.4	2542	5105		
	11	0.7	2521	15189		
	15	0.75	2517	10076		
	18	0.8	2514	7546.5		
Load-out #3	20	0.8	2514	5028	50644	2532.2
	0	0.7	2521			
	1	1	2500	2510.5		
	3	1.6	2458	4958		
	7	2.6	2388	9692		
	11	3.4	2332	9440		
	15	3.7	2311	9286		
Load-out #4	20	3.8	2304	11538	47424	2371.2
	0	1	2500			
	2	1.2	2486	4986		
	6	2	2430	9832		
	10	2.7	2381	9622		

APPENDIX I-CONTINUTED-AIRFLOW CALCULATIONS

	Time	Static Pres	Fan Volume (CFM)	Airflow for Interval	Total Airflow	Average CFM
	14	2.9	2367	9496		
	18	3.1	2353	9440		
Load-out #5	20	3.1	2353	4706	48082	2404.1

APPENDIX 1-CONTINUED-AIRFLOW SUMMARY

	Hopper Bottom	End Dump	Baffel	Loadout
#1	37542	47928	46108	50490
#2	37409	47732	45839	48820
#3	48082	41670	47004	50644
#4	47683	44463	46150	47424
#5	48853	46500	45856	48082
Avg	43914	45658	46191	49092

Summary-Average CFM

	Hopper Bottom	End Dump	Baffel	Loadout
#1	2502.8	2396.4	2305.4	2524.5
#2	2493.9	2386.6	2291.9	2441.0
#3	2404.1	2083.5	2350.2	2532.2
#4	2384.2	2223.2	2307.5	2371.2
#5	2442.6	2325.0	2292.8	2404.1
Avg	2445.5	2282.9	2309.6	2454.6

APPENDIX 2

DUST AND TRUCK WEIGHTS DATA SHEETS

			Filter bag data			Grain data				Calculated emissions		
Test #	type	Truck #	Type	Filter bag tare (lbs)	Filter Bag net (lbs)	Net dust (lbs.)	Truck tare (lbs.)	Truck Gross (lbs)	Truck net (lbs)	Truck net tons	Airborne dust collected (lbs./ton)	Floor dust (total)	Floor Dust (lbs./ton)
1	RECEIVING	1	Semi	Bag #1	4.248	4.295	0.047						
				Bag #2	4.194	4.346	0.152						
				Bag #3	4.123	4.227	0.104						
				Total			0.303	57620	22480	35140	17.57	0.0172	0.52363	0.0298
1	RECEIVING	2	Tandem	Bag #1	4.015	4.113	0.098						
				Bag #2	4.303	4.486	0.183						
				Bag #3	4.311	4.596	0.285						
				Total			0.566	55000	18260	36740	18.37	0.0308	0.90019	0.0490
1	RECEIVING	3	Semi	Bag #1	4.037	4.208	0.171						
				Bag #2	4.355	4.454	0.099						
				Bag #3	4.396	4.454	0.058						
				Total			0.328	56420	22500	33920	16.96	0.0193	0.60888	0.0359
1	RECEIVING	4	Tandem	Bag #1	4.057	4.296	0.239						
				Bag #2	4.364	4.521	0.157						
				Bag #3	4.427	4.512	0.085						
				Total			0.481	53620	18440	35180	17.59	0.0273	0.7025	0.0399
1	RECEIVING	5	Semi	Bag #1	4.112	4.265	0.153						
				Bag #2	4.38	4.491	0.111						
				Bag #3	4.443	4.5	0.057						
				Total			0.321	58040	22520	35520	17.76	0.0181	0.50563	0.0285
1	RECEIVING	6	Tandem	Bag #1	4.142	4.59	0.448						
				Bag #2	4.407	4.754	0.347						
				Bag #3	4.465	4.663	0.198						
				Total			0.993	55420	18460	36960	18.48	0.0537	0.77494	0.0419
1	RECEIVING	7	Semi	Bag #1	4.169	4.354	0.185						
				Bag #2	4.406	4.542	0.136						
				Bag #3	4.481	4.549	0.068						
				Total			0.389	58060	22520	35540	17.77	0.0219	0.77538	0.0436
1	RECEIVING	8	Tandem	Bag #1	4.213	4.368	0.155						
				Bag #2	4.433	4.718	0.285						
				Bag #3	4.49	4.831	0.341						
				Total			0.781	54800	18460	36340	18.17	0.0430	0.97756	0.0538
1	RECEIVING	9	Semi	Bag #1	4.201	4.257	0.056						
				Bag #2*	4.047	4.189	0.142						
				Bag #3	4.522	4.668	0.146						
				Total			0.344	58660	22520	36140	18.07	0.0190	0.60006	0.0332

APPENDIX 2

DUST AND TRUCK WEIGHTS DATA SHEETS

			Filter bag data			Grain data				Calculated emissions		
Test #	type	Truck # Type		Filter bag tare (lbs)	Filter Bag net (lbs)	Net dust (lbs.)	Truck tare (lbs.)	Truck Gross (lbs)	Truck net (lbs)	Truck net tons	Airborne dust collected (lbs./ton)	Floor dust (total)	Floor Dust (lbs./ton)
1	RECEIVING	10 Tandem	Bag #1*	4.131	4.464	0.333							
			Bag #2	4.127	4.402	0.275							
			Bag #3	4.542	4.648	0.106							
			Total			0.714	54780	18480	36300	18.15	0.0393	1.07988	0.0595
				AVERAGE-SEMI		0.337	57760	22508	35252	17.626	0.01911743	0.60271	0.03420287
				AVERAGE-TANDEM		0.707	54724	18420	36304	18.152	0.03884235	0.88701	0.04883452
	EXTRA FAN TIME		Bag #1	4.464	4.47	0.006							
			Bag #2	4.402	4.409	0.007							
			Bag #3	4.648	4.652	0.004							
			Total			0.017	54780	18480	36300	18.15	0.0009	NA	0.0000

APPENDIX 2

DUST AND TRUCK WEIGHTS DATA SHEETS

Test #	type	Truck #	Type		Filter bag data: Filter bag tare (lbs)	Filter Bag net (lbs)	Net dust (lbs.)	Grain data: Truck tare (lbs.)	Truck Gross (lbs)	Truck net (lbs)	Truck net tons	Calculated emissions: Airborne dust collected (lbs./ton)	Floor dust (total)	Floor Dust (lbs./ton)
2	BAFFELS	1	tandem	Bag #1	4.267	4.351	0.084							
			tandem	Bag #2	4.224	4.437	0.213							
			tandem	Bag #3	4.533	4.758	0.225							
				Total			0.522	55300	18500	36800	18.4	0.0284	0.43019	0.0234
2	BAFFELS	2	tandem	Bag #1	4.263	4.367	0.104							
			tandem	Bag #2	4.263	4.491	0.228							
			tandem	Bag #3	4.495	4.761	0.266							
				Total			0.598	54840	18580	36260	18.13	0.0330	0.48931	0.0270
2	BAFFELS	3	tandem	Bag #1	4.256	4.353	0.097							
			tandem	Bag #2	4.295	4.549	0.254							
			tandem	Bag #3	4.357	4.586	0.229							
				Total			0.58	56200	18520	37680	18.84	0.0308	0.3915	0.0208
2	BAFFELS	4	tandem	Bag #1	4.29	4.38	0.09							
			tandem	Bag #2	4.346	4.597	0.251							
			tandem	Bag #3	4.465	4.674	0.209							
				Total			0.55	54660	18540	36120	18.06	0.0305	0.29288	0.0162
2	BAFFELS	5	tandem	Bag #1*	4.137	4.272	0.135							
			tandem	Bag #2	4.304	4.522	0.218							
			tandem	Bag #3	4.541	4.774	0.233							
				Total			0.586	56360	18580	37780	18.89	0.0310	0.48538	0.0257
				AVERAGE-BAFFELS			0.5672	55472	18544	36928	18.464	0.03072298	0.41785	0.02261214
									BAFFEL EFFICIENCY			20.90%	52.89%	

APPENDIX 2

DUST AND TRUCK WEIGHTS DATA SHEETS

Test #	type	Truck #	Type		Filter bag data: Filter bag tare (lbs)	Filter Bag net (lbs)	Net dust (lbs.)	Grain data: Truck tare (lbs.)	Truck Gross (lbs)	Truck net (lbs)	Truck net tons	Calculated emissions: Airborne dust collected (lbs./ton)	Floor dust (total)	Floor Dust (lbs./ton)
3	LOAD-OUT	1	tandem	Bag #1	4.213	4.22	0.007							
			tandem	Bag #2	4.324	4.357	0.033							
			tandem	Bag #3	4.568	4.62	0.052							
				Total			0.092	54540	18500	36040	18.02	0.0051	0.02206	0.0012
3	LOAD-OUT	2	tandem	Bag #1	4.22	4.251	0.031							
			tandem	Bag #2	4.357	4.405	0.048							
			tandem	Bag #3	4.62	4.677	0.057							
				Total			0.136	56920	18540	38380	19.19	0.0071	0.05163	0.0027
3	LOAD-OUT	3	tandem	Bag #1	4.188	4.258	0.07							
			tandem	Bag #2	4.334	4.383	0.049							
			tandem	Bag #3	4.608	4.627	0.019							
				Total			0.138	54480	18540	35940	17.97	0.0077	0.04263	0.0024
3	LOAD-OUT	4	tandem	Bag #1	4.258	4.346	0.088							
			tandem	Bag #2	4.383	4.454	0.071							
			tandem	Bag #3	4.627	4.652	0.025							
				Total			0.184	55080	18540	36540	18.27	0.0101	0.16363	0.0090
3	LOAD-OUT	5	tandem	Bag #1	4.264	4.355	0.091							
			tandem	Bag #2	4.377	4.476	0.099							
			tandem	Bag #3	4.596	4.639	0.043							
				Total			0.233	56620	18540	38080	19.04	0.0122	0.09094	0.0048
				AVERAGE-LOAD-OUT			0.1566	55528	18532	36996	18.498	0.0084361	0.07418	0.00400372

ENID GRAIN INSPECTION CO
ENID, OKLAHOMA 73702

LISTING FOR: 234

DATE 09/27/94

IDENT. OF SAMPLE / GRADE*	CUSTOMER	LOCATION	TICKET
T.W. MOIS D.K. HEAT BCFM* FM SOUND BRKN TD* F1* F2* DOC FROT MOVEM TYPE	COMMENT	REMARK	
OK 458-4AL 10:14 A.M OKLAHOMA STATE UNIVERSITY ALVA, OK			1116
1 HARD RED WINTER WHEAT			
60.5 12.0 0.2 1.8 2.0 0.3 OUT OFFICIAL			
OK 458-4AL 11:40 A.M OKLAHOMA STATE UNIVERSITY ALVA, OK			343
1 HARD RED WINTER WHEAT			
60.4 12.0 0.3 2.2 2.5 0.3 OUT OFFICIAL			
OK 458-4AL 2:40 P.M. OKLAHOMA STATE UNIVERSITY ALVA, OK			784
1 HARD RED WINTER WHEAT			
60.3 12.2 0.1 1.5 1.6 0.4 OUT OFFICIAL			
OK 458-4AL 3:30 P.M. OKLAHOMA STATE UNIVERSITY ALVA, OK			216
1 HARD RED WINTER WHEAT			
60.2 12.0 0.4 0.1 1.4 1.9 0.4 OUT OFFICIAL			
OK 5130 9:10 A.M. OKLAHOMA STATE UNIVERSITY ALVA, OK			353
1 HARD RED WINTER WHEAT			
60.7 11.8 0.4 0.1 1.4 1.9 0.3 OUT OFFICIAL			
OK 5132 9:15 A.M. OKLAHOMA STATE UNIVERSITY ALVA, OK			796
1 HARD RED WINTER WHEAT			
60.7 11.9 1.2 1.2 0.2 OUT OFFICIAL			
OK 682-255T OKLAHOMA STATE UNIVERSITY ALVA, OK			1511
1 HARD RED WINTER WHEAT			
60.2 12.1 0.1 1.5 1.6 0.4 OUT OFFICIAL			
OK 682-255T 1:00 P.M OKLAHOMA STATE UNIVERSITY ALVA, OK			671
1 HARD RED WINTER WHEAT			
60.3 12.0 0.2 0.1 1.5 1.8 0.4 OUT OFFICIAL			
OK 682-255T 4:25 P.M OKLAHOMA STATE UNIVERSITY ALVA, OK			110
1 HARD RED WINTER WHEAT			
60.2 12.2 0.2 0.1 1.5 1.8 0.4 OUT OFFICIAL			
OK 682-259T 10:05A.M OKLAHOMA STATE UNIVERSITY ALVA, OK			1611
1 HARD RED WINTER WHEAT			
60.5 12.2 0.1 1.3 1.4 0.3 OUT OFFICIAL			

*NOTE
GRADE = 'S' FOR SAMPLE GRADE \ 'F' FOR FACTOR ONLY
BCFM = 'MALTING' FOR BARLEY \ 'DHV,HVAC,HARD' FOR WHEAT
T.D. = 'THIN' FOR BARLEY
F1 = 'BLACK' FOR BARLEY \ 'SPLITS' FOR SOYBEANS \ 'CONTRAST CLASS' FOR WHEAT
F2 = 'OTHER GRAIN' FOR 6R MLTG BARLEY \ 'WILD OATS' FOR 2R MLTG BARLEY
F2 = 'WILD OATS' FOR OATS \ 'FM NOT WHEAT' FOR RYE \ 'DEHULLED' FOR SUNFLOWER
F2 = 'BROKEN FM/OTHER' FOR SORGHUM \ 'SBOC' FOR SOYBEANS
F2 = 'FM NOT WHEAT OR RYE' FOR TRITICALE \ 'WHEAT OF OTHER CLASSES' FOR WHEAT

ENID GRAIN INSPECTION CO
ENID, OKLAHOMA 73702

LISTING FOR: 234

DATE 09/28/94

IDENT. OF SAMPLE / GRADE*	CUSTOMER	LOCATION	TICKET
T.W.	MOIS	D.K.	HEAT	BCFM*	FM	SOUND	BRKN	COMMENT / REMARK TD*	F1*	F2*	DOC	PROT	MOVEM	TYPE	
OK 682-255T 10:00 A. OKLAHOMA STATE UNIVERSITY ALVA, OK															1210
2 HARD RED WINTER WHEAT															
59.8	11.7	0.2			0.1			1.8	2.1		0.4		OUT	OFFICIAL	
OK 682-255T 10:50A.M OKLAHOMA STATE UNIVERSITY ALVA, OK															737
1 HARD RED WINTER WHEAT															
60.1	11.1							1.6	1.6		0.5		OUT	OFFICIAL	
OK 682-255T 11:40 A. OKLAHOMA STATE UNIVERSITY ALVA, OK															70
1 HARD RED WINTER WHEAT															
60.0	11.3							1.9	1.9		0.5		OUT	OFFICIAL	
OK 682-255T 1:50 P.M OKLAHOMA STATE UNIVERSITY ALVA, OK															5156
1 HARD RED WINTER WHEAT															
60.9	11.7							1.2	1.2		0.3		OUT	OFFICIAL	
OK 682-255T 2:35 P.M OKLAHOMA STATE UNIVERSITY ALVA, OK															860
1 HARD RED WINTER WHEAT															
61.0	11.9	0.2			0.1			1.1	1.4		0.3		OUT	OFFICIAL	
OK 682-255T 3:20 P.M OKLAHOMA STATE UNIVERSITY ALVA, OK															1069
1 HARD RED WINTER WHEAT															
60.0	11.7	0.2			0.1			2.4	2.7		0.8		OUT	OFFICIAL	
OK 682-255T 4:10 P.M OKLAHOMA STATE UNIVERSITY ALVA, OK															949
1 HARD RED WINTER WHEAT															
60.3	11.9				0.1			1.7	1.8		0.6		OUT	OFFICIAL	
OK 682-255T 5:00 P.M OKLAHOMA STATE UNIVERSITY ALVA, OK															1373
1 HARD RED WINTER WHEAT															
61.2	12.1	0.2						1.3	1.5		0.3		OUT	OFFICIAL	
OK 682-255T 8:30A.M. OKLAHOMA STATE UNIVERSITY ALVA, OK															1461
2 HARD RED WINTER WHEAT															
59.9	12.1				0.1			1.6	1.7		0.4		OUT	OFFICIAL	
OK 682-255T 9:10 A.M OKLAHOMA STATE UNIVERSITY ALVA, OK															1425
2 HARD RED WINTER WHEAT															
59.9	12.1				0.1			1.6	1.7		0.4		OUT	OFFICIAL	

*NOTE
GRADE = 'S' FOR SAMPLE GRADE \ 'F' FOR FACTOR ONLY
BCFM = 'MALTING' FOR BARLEY \ 'DHV,HVAC,HARD' FOR WHEAT
T.D. = 'THIN' FOR BARLEY
F1 = 'BLACK' FOR BARLEY \ 'SPLITS' FOR SOYBEANS \ 'CONTRAST CLASS' FOR WHEAT
F2 = 'OTHER GRAIN' FOR 6R MLTG BARLEY \ 'WILD OATS' FOR 2R MLTG BARLEY
F2 = 'WILD OATS' FOR OATS \ 'FM NOT WHEAT' FOR RYE \ 'DEHULLED' FOR SUNFLOWER
F2 = 'BROKEN FM/OTHER' FOR SORGHUM \ 'SBOC' FOR SOYBEANS
F2 = 'FM NOT WHEAT OR RYE' FOR TRITICALE \ 'WHEAT OF OTHER CLASSES' FOR WHEAT

SOONER SNAPS-CROMWELLS INC., ENID, OKLA. (1-800-522-1468) 1990

WHEELER BROTHERS GRAIN CO., INC.
Ph. 327-0141 410 SANTA FE, ALVA, OKLA.

No. 5141
MISCELLANEOUS
DATE 9-26-94

Customer's Name: Air Quality No 4 Tandem
Address:
Commodity: Test: Grade:
Moist.: Dkg.:
Remarks:

54800 lbs. Gross 09:19 AM 09 26 94
18460 lbs. Tare 03:04 PM 09 26 94
lbs. Net
bu. Net @ 74 509
On / Off Weigher
Per bu. Amt.
Driver: 09 26 94

WHEELER BROTHERS GRAIN CO., INC.
Ph. 327-0141 410 SANTA FE, ALVA, OKLA.

No. 5144
MISCELLANEOUS
DATE 9-26-94

Customer's Name: Air Quality No 5 Tandem
Address:
Commodity: Test: Grade:
Moist.: Dkg.:
Remarks:

54780 lbs. Gross 09:19 AM 09 26 94
18480 lbs. Tare 04:27 PM 09 26 94
36300 lbs. Net
605 bu. Net @
On / Off Weigher
Per bu. Amt.
Driver:

WHEELER BROTHERS GRAIN CO., INC.
Ph. 327-0141 410 SANTA FE, ALVA, OKLA.

No. 5132
MISCELLANEOUS
DATE 9-26

Customer's Name: Air Quality No 1 Tandem
Address:
Commodity: Test: Grade:
Moist.: Dkg.:
Remarks:

55000 lbs. Gross 09:19 AM 09 26 94
18260 lbs. Tare 02:12 PM 09 26 94
36,740 lbs. Net
612 20 bu. Net @
On / Off Weigher
Per bu. Amt.
Driver:

WHEELER BROTHERS GRAIN CO., INC.
Ph. 327-0141 410 SANTA FE, ALVA, OKLA.

No. 5134
MISCELLANEOUS
DATE 9-26-94

Customer's Name: Air Quality No 2 Tandem
Address:
Commodity: Test: Grade:
Moist.: Dkg.:
Remarks:

53620 lbs. Gross 09 26 94
18440 lbs. Tare 11:12 AM 09 26 94
35180 lbs. Net
586 20 bu. Net @
On / Off Weigher
Per bu. Amt.
Driver:

WHEELER BROTHERS GRAIN CO., INC.
Ph. 327-0141 410 SANTA FE, ALVA, OKLA.

No. 5138
MISCELLANEOUS
DATE 9-26-

Customer's Name: Air Quality No 3 Tand
Address:
Commodity: Test: Grade:
Moist.: Dkg.:
Remarks:

55420 lbs. Gross 12:31 PM 09 26 94
18460 lbs. Tare 12:27 PM 09 26 94
36960 lbs. Net
616 bu. Net @
On / Off Weigher
Per bu. Amt.
Driver:

SOONER SNAPS-CROMWELLS INC., ENID, OKLA. (1-800-522-1468) 1990

WHEELER BROTHERS GRAIN CO., INC.
Ph. 327-0141 410 SANTA FE, ALVA, OKLA.

No. 5140
MISCELLANEOUS

DATE 9-26-94

Customer's Name AIR QUALITY NO 4 SEMI
Address
Commodity
Test
Grade
Moist.
Dkg.
Remarks

58060 lbs. Gross 01:56 PM 09 26 94
22520 lbs. Tare 01:19 PM 09 26 94
35540 lbs. Net

bu. Net @ Per bu. Amt.
On
Off Weigher
Driver

WHEELER BROTHERS GRAIN CO., INC.
Ph. 327-0141 410 SANTA FE, ALVA, OKLA.

No. 5130
MISCELLANEOUS

DATE 9-26-94

Customer's Name Air Quality #1 Semi
Address
Commodity
Test
Grade
Moist.
Dkg.
Remarks

57620 lbs. Gross 09 26 94
22480 lbs. Tare 08:49 AM 09 26 94
35140 lbs. Net
585 40

bu. Net @ Per bu. Amt.
On
Off Weigher
Driver

SOONER SNAPS-CROMWELLS INC., ENID, OKLA. (1-800-522-1468) 1990

SOONER SNAPS-CROMWELLS INC., ENID, OKLA. (1-800-522-1468) 1990

WHEELER BROTHERS GRAIN CO., INC.
Ph. 327-0141 410 SANTA FE, ALVA, OKLA.

No. 5133
MISCELLANEOUS

DATE 9-26-94

Customer's Name AIR QUALITY NO 2 SEMI
Address
Commodity
Test
Grade
Moist.
Dkg.
Remarks

56420 lbs. Gross 09 26 94
22500 lbs. Tare 10:19 AM 09 26 94
33920 lbs. Net
565 20

bu. Net @ Per bu. Amt.
On
Off Weigher
Driver

SOONER SNAPS-CROMWELLS INC., ENID, OKLA. (1-800-522-1468) 1990

SOONER SNAPS-CROMWELLS INC., ENID, OKLA. (1-800-522-1468) 1990

WHEELER BROTHERS GRAIN CO., INC.
Ph. 327-0141 410 SANTA FE, ALVA, OKLA.

No. 5142
MISCELLANEOUS

DATE 9-26-94

Customer's Name AIR QUALITY NO 5 SEMI
Address
Commodity
Test
Grade
Moist.
Dkg.
Remarks

58660 lbs. Gross 03:47 PM 09 26 94
22520 lbs. Tare 03:40 PM 09 26 94
36140 lbs. Net
602 20

bu. Net @ Per bu. Amt.
On
Off Weigher
Driver

SOONER SNAPS-CROMWELLS INC., ENID, OKLA. (1-800-522-1468) 1990

WHEELER BROTHERS GRAIN CO., INC.
Ph. 327-0141 410 SANTA FE, ALVA, OKLA.

No. 5137
MISCELLANEOUS

DATE 9-26-94

Customer's Name AIR QUALITY NO. 3 SEMI
Address
Commodity
Test
Grade
Moist.
Dkg.
Remarks

58040 lbs. Gross 09 26 94
22520 lbs. Tare 11:48 AM 09 26 94
35520 lbs. Net
592

bu. Net @ Per bu. Amt.
On
Off Weigher
Driver

SOONER SNAPS-CROMWELLS INC., ENID, OKLA. (1-800-522-1468) 1990

WHEELER BROTHERS GRAIN CO., INC.
Ph. 327-0141 410 SANTA FE, ALVA, OKLA.

No. 5149
MISCELLANEOUS
DATE 9-27-94

Customer's Name Air Quality No 1 Baffle
Address Tandem
Commodity
Test Grade
Moist. Dkg.
Remarks

55300 lbs. Gross 09 27 94
18500 lbs. Tare 08:27 AM 09 27 94
36800 lbs. Net
613 20 bu. Net @ Per bu. Amt.
Driver On Off Weigher

WHEELER BROTHERS GRAIN CO., INC.
Ph. 327-0141 410 SANTA FE, ALVA, OKLA.

No. 5150
MISCELLANEOUS
DATE 9-27-94

Customer's Name Air Quality No 2 Baffle
Address Tandem
Commodity
Test Grade
Moist. Dkg.
Remarks

54840 lbs. Gross 09 27 94
18580 lbs. Tare 09:19 AM 09 27 94
36260 lbs. Net
604 20 bu. Net @ Per bu. Amt.
Driver On Off Weigher

WHEELER BROTHERS GRAIN CO., INC.
Ph. 327-0141 410 SANTA FE, ALVA, OKLA.

No. 5151
MISCELLANEOUS
DATE 9-27-94

Customer's Name Air Quality No #3 Baffle
Address Tandem
Commodity
Test Grade
Moist. Dkg.
Remarks

56200 lbs. Gross 09 27 94
18520 lbs. Tare 10:07 AM 09 27 94
37680 lbs. Net
628 bu. Net @ Per bu. Amt.
Driver On Off Weigher

WHEELER BROTHERS GRAIN CO., INC.
Ph. 327-0141 410 SANTA FE, ALVA, OKLA.

No. 5152
MISCELLANEOUS
DATE 9-27-94

Customer's Name Air Quality No #4 Baffle
Address
Commodity
Test Grade
Moist. Dkg.
Remarks

54660 lbs. Gross 11:10 AM 09 27 94
18540 lbs. Tare 10:55 AM 09 27 94
36120 lbs. Net
602 bu. Net @ Per bu. Amt.
Driver On Off Weigher

SOONER SNAPS-CROMWELLS INC., ENID, OKLA (1-800-522-1468) 1890

2652

WHEELER BROTHERS GRAIN CO., INC.
Ph. 327-0141 410 SANTA FE, ALVA, OKLA.

No. 5154
MISCELLANEOUS
DATE 9-27-94

Customer's Name Air Quality No 5 Baffle
Address
Commodity
Test Grade
Moist. Dkg.
Remarks

56360 lbs. Gross 11:55 AM 09 27 94
18580 lbs. Tare 11:47 AM 09 27 94
37780 lbs. Net
629 40 bu. Net @ Per bu. Amt.
Driver On Off Weigher

SOONER SNAPS-CROMWELLS INC., ENID, OKLA. (1-800-522-1460) 1990

WHEELER BROTHERS GRAIN CO., INC.
Ph. 327-0141 410 SANTA FE, ALVA, OKLA.

No. 5159
MISCELLANEOUS

DATE 9-27-94

Customer's Name Air Quality No 4 Load out
Address
Commodity
Test
Grade
Moist.
Dkg.
Remarks

55080 lbs. Gross 03:25 PM 09 27 94
18540 lbs. Tare 03:47 PM 09 27 94
36540 lbs. Net
609 bu. Net @
Per bu.
Amt.
On
Off
Weigher
Driver

SOONER SNAPS-CROMWELLS INC., ENID, OKLA. (1-800-522-1460) 1990

WHEELER BROTHERS GRAIN CO., INC.
Ph. 327-0141 410 SANTA FE, ALVA, OKLA.

No. 5160
MISCELLANEOUS

DATE 9-27-94

Customer's Name Air Quality No 5 Load out
Address
Commodity
Test
Grade
Moist.
Dkg.
Remarks

56620 lbs. Gross 05:14 PM 09 27 94
18540 lbs. Tare 05:43 PM 09 27 94
38080 lbs. Net
634 40 bu. Net @
Per bu.
Amt.
On
Off
Weigher
Driver

WHEELER BROTHERS GRAIN CO., INC.
Ph. 327-0141 410 SANTA FE, ALVA, OKLA.

No. 5156
MISCELLANEOUS

DATE 9-27-94

Customer's Name Air Quality No 1 Load out
Address
Commodity
Test
Grade
Moist.
Dkg.
Remarks

56540 lbs. Gross 02:06 PM 09 27 94
18500 lbs. Tare 12:47 PM 09 27 94
38040 lbs. Net
634- bu. Net @
Per bu.
Amt.
On
Off
Weigher
Driver

WHEELER BROTHERS GRAIN CO., INC.
Ph. 327-0141 410 SANTA FE, ALVA, OKLA.

No. 5158
MISCELLANEOUS

DATE 9-27-94

Customer's Name Air Quality NO 2 Load out
Address
Commodity
Test
Grade
Moist.
Dkg.
Remarks

56920 lbs. Gross 02:17 PM 09 27 94
18540 lbs. Tare 02:17 PM 09 27 94
38380 lbs. Net
639 40 bu. Net @
Per bu.
Amt.
On
Off
Weigher
Driver

WHEELER BROTHERS GRAIN CO., INC.
Ph. 327-0141 410 SANTA FE, ALVA, OKLA.

No. 5157
MISCELLANEOUS

DATE 9-27-94

Customer's Name Air Quality NO 3
Address
Commodity
Test
Grade
Moist.
Dkg.
Remarks

54480 lbs. Gross 03:35 PM 09 27 94
18540 lbs. Tare 02:17 PM 09 27 94
35940 lbs. Net
599- bu. Net @
Per bu.
Amt.
On
Off
Weigher
Driver

Dust Emission Test Protocol

Objectives:

I. Capture and measure the amount of grain dust emitted (per ton of grain handled) during the receiving process of a typical Oklahoma elevator.

II. Capture the amount of grain dust emitted (per ton of grain handled) during the truck load-out process of a typical Oklahoma elevator.

III. Measure the impact of dump-pit baffles on grain dust emissions from receiving operations.

IV. Determine the impact of truck type (end-dump versus hopper bottomed) on dust emissions at receiving.

Secondary Objective

I. Determine the particle size distribution and aerodynamic mean diameter of the grain dust captured.
Note-This information is not needed for the current sub-chapter. However it could be used to determine what proportion of the dust captured is too large to stay airborne i.e. an off premise adjustment. It could also be important for modeling PM-10 levels. The determination of aerodynamic mean diameter would be contingent on obtaining access to a cascade impactor, or other similar equipment which inertially separates particles, through contacts at D.E.Q. or other sources.

Dust Emission Test Protocol

Procedures

Objective I: Capture and measure the amount of grain dust emitted (per ton of grain handled) during the receiving process of a typical Oklahoma elevator.

1. Blowers and Airflow

A 7.5 h.p. centrifugal blower will be attached to a fabric bag filter. The blower will provide approximately 2,500 c.f.m. at the 2" w.c. static pressure which has been measured when the fan is run with the filter bags attached (see attached fan curve). This will allow for a complete air exchange of the dump shed in approximately 10 minutes. The blower will be started one minute before the grain unloading begins and run a sufficient amount of time to complete 1 1/2 to 2 air exchanges. During the test, manometer readings will be used measure the differential pressure across the blower to calculate the actual airflow through the blowers. Two "man-cooler" fans (about 1/3 h.p.) will be placed inside the dump shed and operated during the test. The purpose of these fans is to ensure that all emitted dust particles which are light enough to become airborne under typical atmospherical conditions remains suspended during the time period required to evacuate the dust laden air from the dump shed. These fans should simulate typical wind conditions through a dump shed while still allowing the heavier particles which do not normally become airborne to settle out. A portable anemometer will be used to measure the air speed generated by the fans at various points in the dump shed.

2. Trucks

4-5 loads from typical end-dump grain trucks (2,400-3,000 bu.--144,000-180,000 lbs) and 4-5 loads from hopper-bottomed dump trucks (of similar size) will be unloaded in the enclosed dump shed. (This volume should generate a 90% confidence interval of +-10% of the reported emission factor for each truck type.) The truck type (end-dump versus hopper bottomed) will be included with each weight recorded. Each truck will be weighed on the facility's commercial scale, which will have a current certification. The trucks will be weighed before and after unloading in order to determine the tare weight of the truck and actual weight of the grain unloaded. A grain probe will be used to obtain a representative sample of the grain in each truck. The samples will be graded in accordance with the USDA-Federal Grain Inspection Service Guidelines ("Inspecting Grain-Practical Procedures for Grain Handlers", U.S. Government Printing Office 517-013/46532, July 1991-Summarized in OSU Fact Sheet #223 (attached)). An aggregate emission factor (for the combination of truck types) will be calculated along with separate sub-factors for each truck type.

Note: Since the grain in the elevator bin is already a composite of many

Procedures (Continued)

Note: Since the grain in the elevator bin is already a composite of many delivered loads, and one truck should provide a sufficient volume of dust to measure accurately on a laboratory scale, the only advantage of more multiple loads is to account for the variation in dust emitted between loads and increase the overall validity and repeatability of the test. The proposed volume is near the upper limit of the amount which can be unloaded into trucks without switching to a second grain bin which would introduce another source of variation.

3. Dump Shed

The concrete dump shed proposed for the test has a total volume of approximately 24,000 cu. ft., can be totally enclosed, and has removable dump-pit baffles (see diagrams). The dump-pit dust control baffles will be removed for the initial test (Objective I). The grain shed doors will be closed before unloading begins. All major inlets will be sealed with tape or sealant with the exception of the small cracks around the doors. These small gaps should provide inlet air without allowing any dust laden air to escape. The outlet air will be ducted through a sealed doorway on the side of the dump shed and will lead to the blower and fabric filter through a duct system. The primary air flow will travel around the doors, across and over the grain dump pit, and up to the outlet duct.

4. Fabric Air Filter

Three fabric bag filters will be used to capture grain dust entrained in the air. The filters will emptied after every truck load, and a new tare weight will be established. Samples of the dust in the filters will be obtained for particle size analysis.

The fabric filters will be weighed on a scale provided by (and certified by) the Oklahoma Department of Agriculture, Weights and Measures Division. The scale has an accuracy of + or - .001 lbs. and is capable of weighing from 0-200 lbs. (AP-42 emission factors imply that 90 lbs. dust could be captured from the 300,000 of grain handled.

Procedures (Continued)

II. Capture the amount of grain dust emitted (per ton of grain handled) during the truck load-out process of a typical Oklahoma elevator.

The same test procedures described in Objective I will be used to measure the amount of dust emitted when a typical grain truck is loaded within the enclosed dump shed. 4-5 grain trucks (2,400-3,000 bu.--144,000-180,000 lbs) will be loaded in the enclosed dump shed with circulating fans running. The emitted dust will be captured and weighed using the procedures previously described in Objective I.

Procedures (Continued)

Objective III. Measure the impact of dump-pit baffles on grain dust emissions from receiving operations.

The procedures described in Objective I will be conducted in a dump pit in which dust control baffles (see diagram) are installed. The test procedure described in Objective I will be repeated with the dump pit baffles allowed to function, but without the pneumatic air control system operating. The dump-pit baffle design, and the percentage of the dump-pit surface which is blocked by the baffles will be documented.

Note: There is no "standard" configuration for dump-pit baffles. The baffle systems which are in place in Oklahoma elevators were individually designed by various millwrights. The results of this test should provide a base-line efficiency estimate for baffles with a similar degree of surface area closure. More recently designed baffle systems may have a higher degree of blockage, and thus be more efficient than the baffles used in this test.

Objective IV. Determine the impact of truck type (end-dump versus hopper bottomed) on dust emissions at receiving.

The data collected in Objective I will be separated by truck type to determine separate emission factors for each truck type and the impact of truck type on dust emissions at receiving.

Note:

In order to provide additional insight into the <u>total amount of dust which is present in the grain</u> the amount of large grain dust particles and other material which settles out of the air stream and on to the floor will be collected and weighed. Samples of this material will be gathered and analyzed to determine the particle size distribution, including the percentage (by weight) of whole and broken grain kernels. Since much of the material gathered from the floor would be normally be recovered through standard OSHA mandated housekeeping procedures, <u>the material gathered from the floor is not a measure of emitted dust</u>. The documentation of the weight of this material is designed to further increase confidence in the test by placing an absolute upper amount on the amount of grain dust which could be emitted from a dump shed under any possible conditions.

Procedures (Continued)

Secondary Objective I. Determine the particle size distribution and aerodynamic mean diameter of the grain dust captured in objective II and III.

Representative samples will be obtained from the bag filters and floor sweepings after they are weighed in the procedures in Objectives I-IV. The particle size distribution will be determined by using a sonic sifter separator which uses a vertical oscillating column of air and a repetitive mechanical pulse to provide a precise particle separation. Other methods including dry sieve and wet sieve analysis, and the use of a cascade impactor or other equipment designed to inertially separate particles may be used to determine the effective mean aerodynamic diameter of the collected grain dust.

Attachments:

1. Dump shed diagram
2. Fan curve-George A. Rolfes Co. Fan #2075
3. Fabric filter manifold design
4. OSU Fact Sheet #223 "Practical Wheat Sampling and Grading Procedures"
5. Dump-pit dust control baffle diagram.

TOTAL DUMP SHED AIR VOLUME ≈ 24000 cf

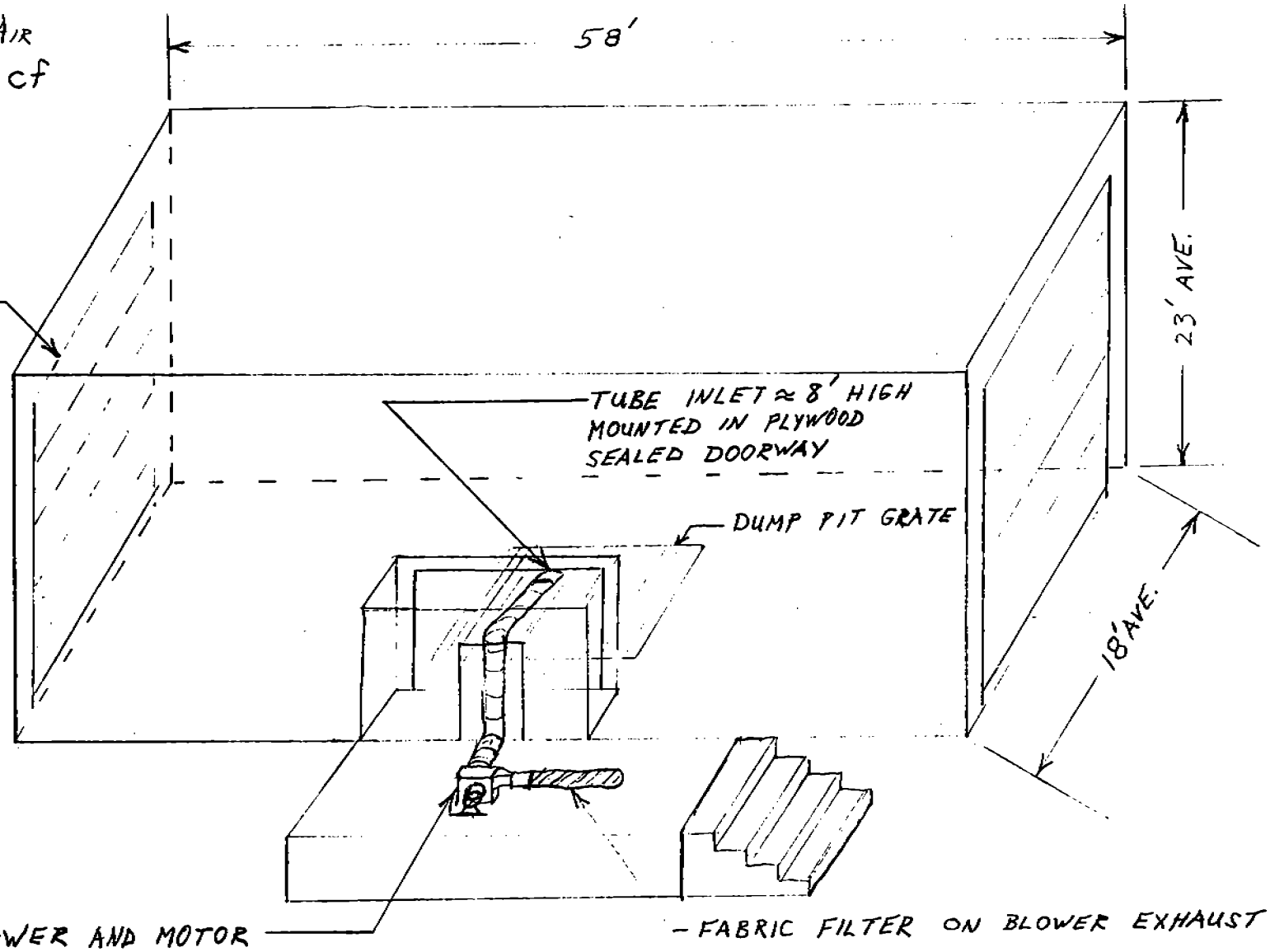

* PREDICTED AIRFLOW PATTERN: UNDER DUMP SHED DOORS, OVER PIT AND UP INTO INLET TUBE

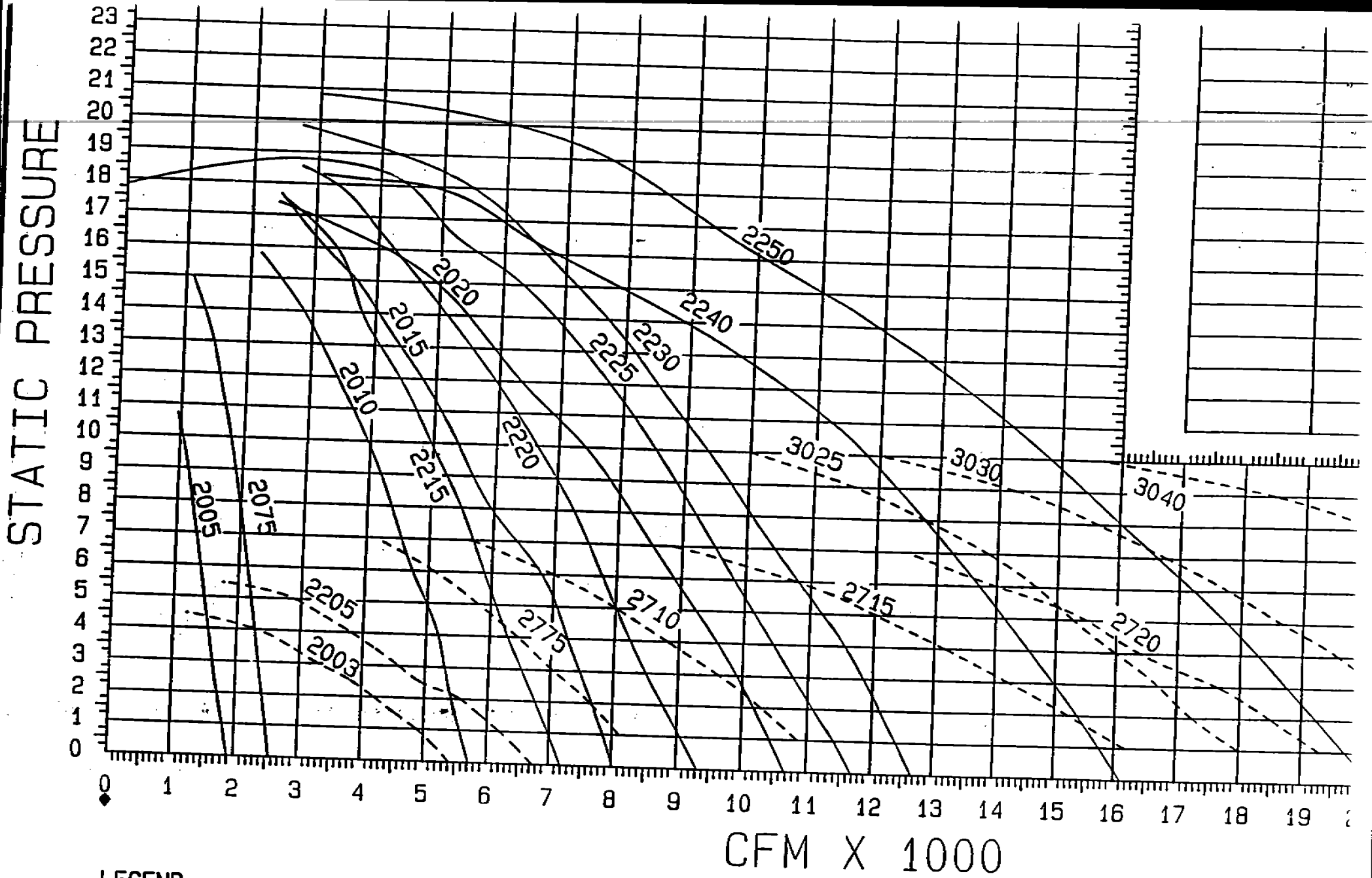

LEGEND
1750 RPM - - - - - - - - - - - -
3450 RPM ————————

GEORGE A. ROLI

ROLFES
CENTRIFUGAL FAN C

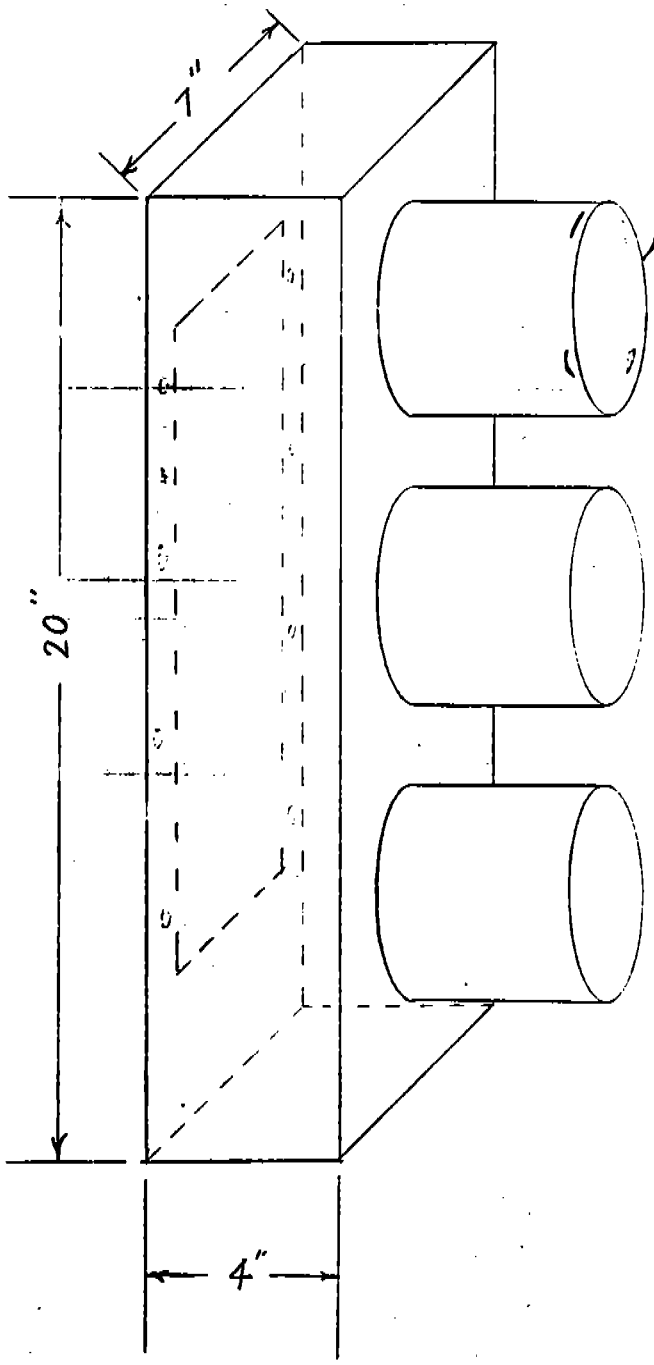

5 1/4" DIA. W/ RAISED WELD BEAD IN 4 PLACES FOR CLAMP ON 3 STEEL TUBES

USE 14 GA STEEL FOR ALL OR SUITABLE OTHER

Airborne Grain Dust Emissions Data Sheet
Test Conducted Under Supervision of
Oklahoma State University Cooperative Extension Service
and the Oklahoma Department of Environmental Quality
DATE:September _____, 1994

			Filter bag data			Weight of grain unloaded or loaded				Calculated emissions	Additional Information							
Test #	Truck #	Truck type	Filter bag-tare (lb)	Filter bag-Net (lb)	net dust (lbs)	Truck tare (lbs)	Truck gross (lbs)	Truck net (lbs)	Truck net (tons)	Dust collected (lbs/ton)	Dust collected-Floor (lbs)	Time on	Time off	total time	Grain grade information			
															Dock	SBK	FM	Grade

AE-9427

PRACTICAL WHEAT SAMPLING AND HAND SIEVING PROCEDURES

Phil Kenkel
Extension Economist

Kim Anderson
Extension Economist

This publication provides practical procedures for sampling and grading wheat which can be used by producers, warehouse managers, and elevator managers. The procedures and portion sizes are based on the USDA Practical Procedures for Grain Handlers. The portions and hand sieving methods presented in this Current Report are not used by official grain inspectors licensed by the Federal Grain Inspection Service. Licensed graders must use larger portions and precision mechanical equipment that will provide the most accurate and most uniform results.

REPRESENTATIVE SAMPLE

Obtaining a representative grain sample is an essential part of grain inspection. Without a representative sample, the final grade will not reflect the true grade or value of the grain.In order for a sample to be considered representative, it must:

1. be obtained in accordance with recommended procedures;
2. be of the prescribed size (at least 1000 grams or approximately 1 1/4 quart); and
3. be handled securely, protected from manipulation, substitution, and careless handling.

The following pages explain the proper way to do probe sampling. Some of this information was taken from *Inspecting Grain-Practical Procedures for Grain Handlers*, Section 1, Sampling Grain.

Probe Sampling

A large percentage of grain, as it travels from the farm to the final consumer, is at one time or another sampled with a grain probe. Probe sampling is the only approved method for obtaining samples from stationary lots. If probe sampling is performed correctly, the samples drawn will consistently be representative.

The Equipment

1. Hand Probe

This standard piece of equipment, sometimes referred to as a trier, is constructed of brass or aluminum. Probes come in various sizes with standard lengths of 5, 6, 8, 10, and 12 feet. The type of carrier dictates which probe length should be used. There are two types of hand probes: compartmented probes in which slots in the outer tube match compartments in the inner tube and open throat probes in which the inner tube is open. Open-throat probes tend to draw more of their sample from the top portion of the grain, while compartmented probes draw a representative sample from each layer. All official grain probes are compartmented probes with a 1-3/8 inches in diameter (outer tube).

Make sure the probe reaches the bottom of the carrier. A 5 or 6 ft. probe will be sufficient for most farm trucks while hopper-bottom carriers may require a longer (6, 8 or 10 ft.) probe.

2. Mechanical probe

There are two types of mechanical probes which are recommended for sampling stationary lots of grain in trucks, railcars, or other open-top carriers. The gravity-fill probe function is similar to compartmented hand probes except that after the compartment is filled it rotates to an inner tube where it is forced up by air. The core probe functions by forcing the sample up into the core as the probe is pushed down and then using air to transport the sample to the output point. A third type, the in-load suction probe which uses negative air pressure to suck the sample into the bottom of the probe, is not recommended since it tends to overestimate foreign material.

2. Sampling Canvas

Heavy canvas cloth or similar material can be used to display the sample from the compartmented probe. Another alternative is a short section of rain gutter, half section of pipe. The sampling canvas or other material should be at least 6 inches longer than the probe used to draw the sample. This size is necessary so that the grain from the entire length of each probe will not spill off the ends of the canvas. Sampling canvases must always be kept clean, dry, and free of holes.

3. Sampling Containers

Containers such as heavy cloth or canvas bags and metal buckets or plastic cans may be used to transport the sample to the inspection station. Sample containers should be free of all old grain, insects, and other waste material prior to use. Air-tight containers or bags lined with a polyethylene liner should be used to store grain to prevent loss of moisture and to protect the sample from adverse environmental conditions such as rain or humid weather.

General Procedures

Before sampling any carrier, record on your sample ticket the carrier's identification number. Visually examine the whole lot of grain. Take a handful of grain from several locations and check it for odor. Record any unusual conditions on your sample ticket. Next, spread your canvas and check to see that the probe and canvas are clean and dry. You are now ready to start sampling.

There are several ways to insert the probe into the grain. Regardless of which technique you use, the general rules are:

1. Insert the probe at a 10 degree angle from the vertical with the slots facing upward and completely closed. The 10 degree angle eases the resistance of the compacted grain against the probe while still allowing the probe to reach the bottom of the container. The slots must be kept closed until the probe is inserted as far as it will go. Otherwise, a disproportionate amount of grain from the top of the slot will fall into the probe compartments as it is being inserted. When sampling grain which contains sand or grit, insert the probe with the slots downward to avoid jamming it. After the probe is inserted, turn the slots upward before opening.

2. After the probe is fully inserted (with the slots facing upward), open the slots and move the probe up and down quickly in two short motions. Close the slots completely, grasp the probe by the outer tube, and withdraw it from the grain. Do not pull the probe by the wooden handle. This can result in the inner tube being pulled out of the outer tube. When this occurs, the probe must be emptied, reassembled, cleaned, and the area probed again.

3. Empty the probe onto the canvas and compare the grain from each depth of the probe for uniformity of kind, condition, and infestation. Also, compare the probe to others drawn from the same lot. If all probes and portions of probes are uniform with one another, they should be composited and placed in a sample bag along with a completed sample ticket. If the examination of the probes indicates that the lot of grain is made up of distinctly different parts in regard to condition (such as musty, sour, commercially objectionable foreign odor, or heating grain), the sampler must then draw a sample from each of the different parts, in addition to the sample that represents the carrier as a whole.

4. When transferring the grain from the canvas to the sampling bag, take care not to allow fine material to be blown from the canvas.

Where to Probe

Draw <u>at least two samples</u> from any truck or trailer that are 600 bushels or less. Larger lots of grain should be probed in 3 to 5 places. Recommended probe sites, which are shown in Figure 1, are anywhere in the carrier except the corners and the center of the load (which was directly underneath the loading spout). The probe sites should be varied between loads in a random manner. Elevators which routinely sample in the same location have found that bad grain seems to migrate to the areas in the load which are not sampled. Hopper bottomed carriers should be probed in the center of each hopper (Figure 2).

Figure 1. Sampling Sites-Truck or Trailer

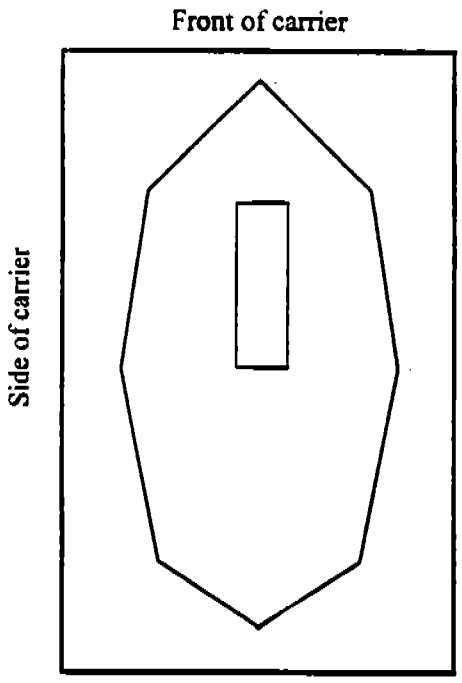

* Draw at least two probe samples from any point in the shaded area.

Figure 2. Sampling Sites-Hopper Bottomed Carriers

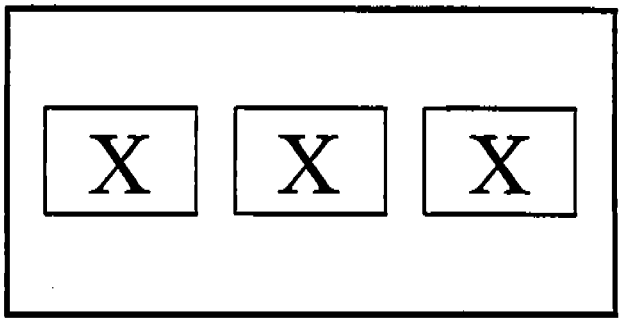

*Draw probe samples from the points marked with an X. Avoid probing in the sprout-lines.

INSPECTION PROCEDURES

The process of inspecting wheat begins when the sample is drawn and follows a prescribed path:

1. Obtain a representative sample of approximately 1,000 g.
2. Examine the sample for insect infestation, heating, or other harmful conditions.
3. Divide out a 250 g. portion (or the amount specified for your moisture meter) and determine the moisture content.
4. Recombine the 250 g. portion and test the entire sample for dockage.
5. Check for objectionable odor.
6. Determine the test weight.
7. Divide out a 250 g. sample and determine the percentage of shrunken and broken kernels (SBK).
8. Divide the sample into small portions for examination of foreign material (30 g.) and damaged kernels (15 g.)

STEP 1-OBTAIN A REPRESENTATIVE SAMPLE

Use the probing procedures described above, or a tailgate sampler to obtain a representative sample of approx. 1000 g.

STEP 2-INSECTS, AND HARMFUL CONDITIONS

The presence of two or more live insects injurious to stored grain causes the grain to be designated "infested", but does not affect the numerical grade. Heating is a condition common to grain which is spoiling and also causes the grain to be designated "U.S. Sample grade." Be careful not to confuse heating with sound grain which is warm due to storage in bins, railcars or other containers during hot weather. Other harmful substances which can cause the grain to be considered U.S. Sample grade include: castor beans, crotalaria seeds, glass, stones, and unknown foreign substances such as rock salt, fertilizer, or "pink wheat".

STEP 3-MOISTURE

Moisture is an essential measure of wheat storability and value and should be determined prior to removing dockage. Moisture can be determined with any device which has been tested and approved by the Oklahoma Department of Agriculture. Moisture meters should be certified once a season and maintained in adherence with the manufacturer's recommendation. Many moisture meters (such as the Montomco) require that a specific weight sample be used. The use of an inexact sample weight will result in an inaccurate measure of moisture content. Additionally, some of the newer moisture meters also display an estimate of test weight. <u>This test weight estimate cannot be legally used in determining grade</u> since it is based on a small sample size (often 100 g. or less) and is made before the dockage is removed.

STEP 4-DETERMINATION OF DOCKAGE IN WHEAT USING HAND SIEVES

The entire sample (approximately 1000 g.) should be used to determine the level of dockage. Wheat dockage is certified to the nearest tenth percent (0.1%, 0.2%, 0.3% etc.). Dockage is weed seeds, weed stems, chaff, straw, grain other than wheat, sand, dirt, and any other material other than wheat, which can be removed readily from wheat by use of appropriate sieves. Following are the guide lines for hand sieving to determine dockage. (Elevators who use a one pint test weight kettle may determine use a smaller portion (500 g.) to determine dockage, provided there is sufficient dockage free wheat to overflow the kettle.)

1. Record the weight of sample used (approximately 1000 g.)

2. For sieving, assemble a 5/64 round-hole sieve on a bottom pan and then place a 12/64 round-hole sieve on top (Figure 3). Place approximately 1/3 of the sample at a time on top of sieve and shake vigorously until all of the wheat passes through the top sieve. Determine the percentage of dockage by combining and weighing all of the material which remained on top of the top sieve and which passed through the bottom sieve. The percentage is calculated by dividing the weight of the material on top of that passed through the sieves by the total sample weight.

Figure 3. Standard Hand-Sieve Set Up for HRW

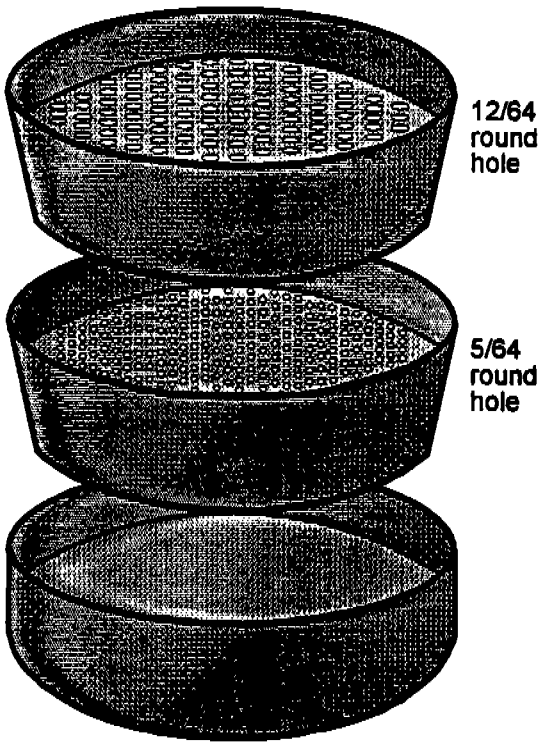

(Shake until all wheat goes through the top pan)

STEP 4-DETERMINATION OF DOCKAGE WITH A MECHANICAL DOCKAGE TESTER

1. Record the weight of sample used (approximately 1000 g.).

2. Clean the dockage tester, insert the appropriate sieves and riddle, and make adjustments recommended by the manufacturer which give results comparable to FGIS standard equipment (Figure 4).

3. Turn on the tester and pour the sample into the hopper.

4. After the sample has cleared the last sieve, turn the tester off.

5. Remove and weigh the dockage (Figure 4).

NOTE:IF THE SAMPLE CONTAINS MORE THAN .5% CHESS OR SIMILAR SEEDS IT MUST BE RUN USING SPECIAL CHESS PROCEDURES-REFER TO OSU FACT SHEET "GRADING CHEATY WHEAT".

Figure 4. Set Up Procedure for Carter Day Dockage Tester
Standard Procedure for HRW

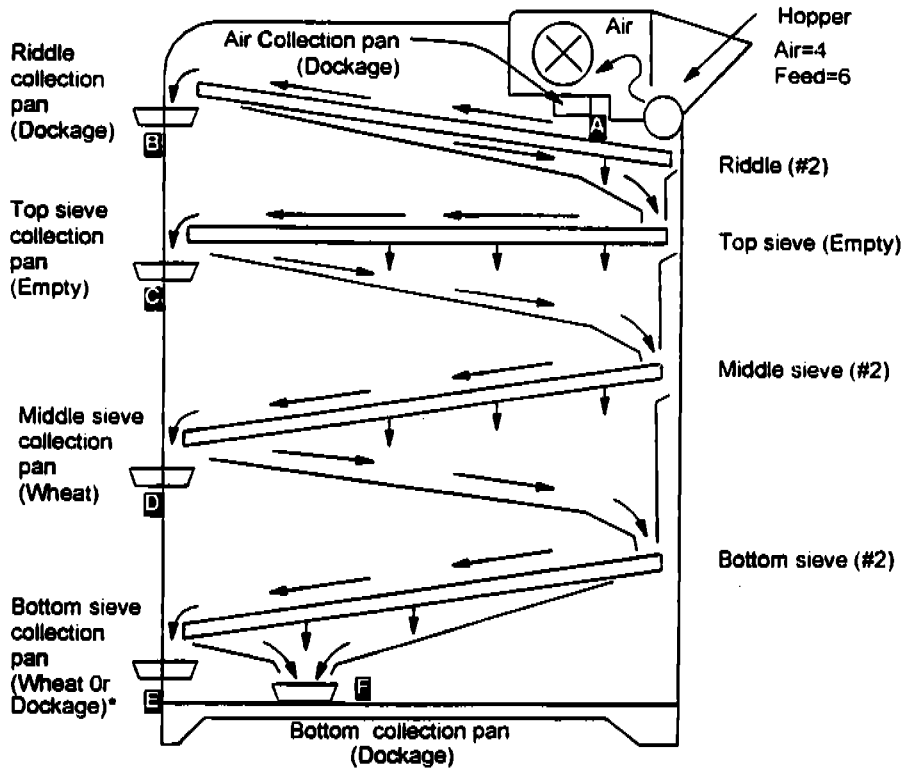

*If the material in Pan E is 50% or more whole or broken kernels of wheat, it is added to the cleaned wheat in Pan D. If it is less than 50% wheat, it is considered dockage.

STEP 5-CHECK FOR OBJECTIONABLE ODORS

Except for smut or garlic odors, wheat which has a musty sour or commercially objectionable foreign odor (COFO) is "U.S. Sample grade." Use the entire sample to determine odor. Fumigant or insecticide odors are not considered COFO if they dissipate after aerating the sample for 4 hours.

STEP 6-DETERMINING TEST WEIGHT

Test weight is a measure of the weight of grain required to fill a specific volume (pint, quart, or bushel). To determine test weight, pour the entire dockage free sample through a funnel into a kettle until the grain overflows the kettle. Level off the kettle making three, full-length, zigzag motions with a stroker. Test weight is determined by weighing the filled kettle on either a special beam scale, an electronic scale programmed to convert gram weight to test weight, or a standard laboratory scale. If a standard scale is used, the gram weight must be converted to test weight per bushel. (multiple the grams in a one quart kettle by .0705 to obtain the test weight in lbs./bu.)

STEP 7-DETERMINATION OF SHRUNKEN AND BROKEN KERNELS IN WHEAT USING HAND SIEVES

Shrunken and broken kernels (S&B) affect the USDA Grade. If the sample is more than 3% S&B kernels, the USDA grade cannot be higher than USDA #2. Following is a procedure to determine the percent shrunken and broken kernels.

1. Divide out a representative dockage free portion of approximately 250 grams. Record the weight of the sample used.
2. Assemble an 064 by 3/8 slotted sieve on top of a bottom pan. The sieve shouldl be held level in both hands directly in front of the body with the elbows close to the sides. The sieve should be held so that the grain will move lengthwise with the perforations. In a steady sieving motion, the sieve should be moved from right to left approximately 10 inches and returned from left to right 20 times (20 complete cycles).The material remaining in the slots should be returned to the wheat which remained on top of the sieve.
3. The material passing through the 0.064 x 3/8 inch sieve is weighed to determine the percentage of shrunken and broken kernels. The percent SBK is determined by dividing the weight of the sieved shrunken and broken kernels by the total weight of the sample sieved.

Figure 5. Standard Set Up Procedure for determining SBK in HRW.

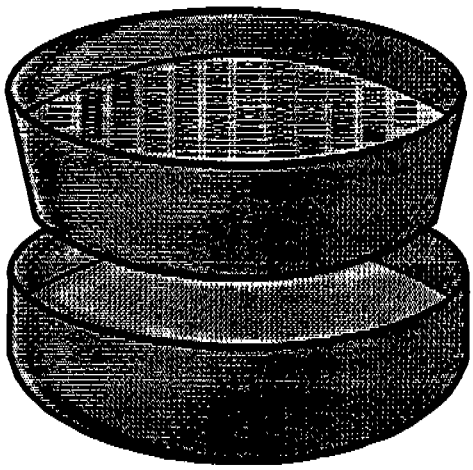

064-3/8 slotted

(20 Strokes)

STEP 8-FOREIGN MATERIAL AND DAMAGED KERNELS

All material other than wheat that remains in the sample after the removal of dockage and shrunken and broken kernels is foreign material. The percentage of foreign material is determined by hand picking a representative 30 g. dockage and S&B free portion. The most common types of kernel damage are black tip fungus, germ, frost, heat, mold, scab, sprout, and insect damaged. The percentage of damaged kernels is determined by handpicking a 15 g. dockage and S&B free portion.

SUMMARY

It is important that grain handlers concentrate in determining the correct grade. Profit margins are too small to lose money because of improper grade determination. The procedures presented in this Current Report are not designed to produce official grades. The procedures should produce relatively accurate estimates of dockage, foreign material, damaged kernels, and other factors affecting grades and the value of the grain.

BAFFLE DESIGN

WHEELER BROS. ELEVATOR
ALVA, OK

AUG 23, 1994

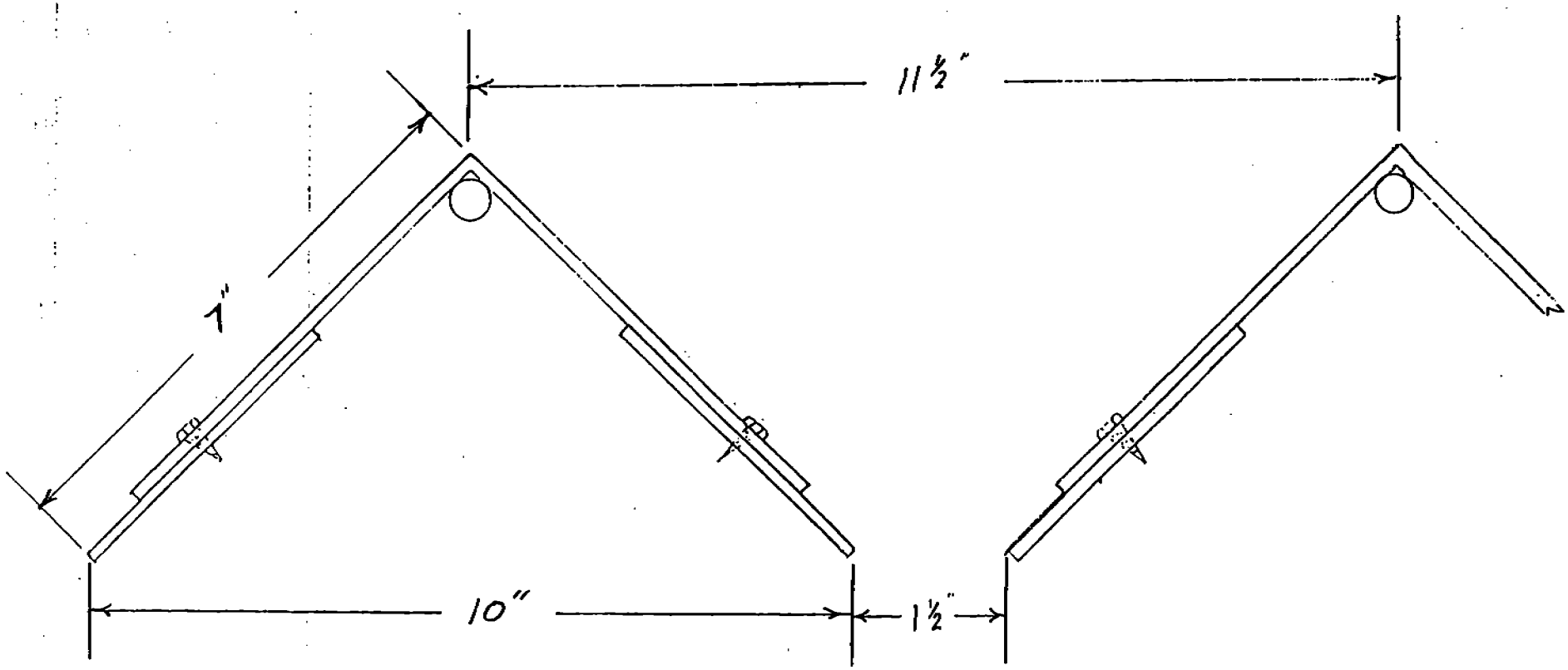

DUMP PIT HAS 10 BAFFLES CONFIGURED AS SHOWN FOR TOTAL OF 14.2% OPEN AREA.

Summary of OSU Grain Elevator Dust Emission Study
and
Proposed Grain Elevator Emission Factors
Report to Oklahoma Air Quality Council-February 2, 1995

Phil Kenkel
Extension Economist-Agribusiness

Ron Noyes, P.E.
Extension Agricultural Engineer

Overview

This report is intended to summarize some of the key issues relating to estimating grain elevator dust emissions. It also provides a brief, non-technical, discussion of the design of the OSU Grain Elevator Dust Emission Study and the study's results. Proposed emission factors for grain elevator operations, based on the OSU study are also presented, and discussed. This report is intended as a supplement to the report on the results of the OSU study which was presented to the Oklahoma Department of Environmental Quality on October 21, 1994. Interested individuals are encouraged to refer to the report for full details of the results discussed in this summary.

Background

The 1990 Clean Air Act required state environmental agencies, including the Oklahoma Department of Environmental Quality (DEQ), to develop permit programs for a variety of industries, including the grain handling industry. This process involves the use of emission factors for grain elevator operations. The emission factors are an integral and important part of the permit process and are used in calculating a grain elevator's "potential to emit" airborne dust. Unless they obtain a minor source permit from the state regulatory authority, firms with a potential to emit over 100 tons/year are classified as major source polluters and fall under federal EPA permitting process.

The implementation of the permitting process in Oklahoma highlighted an urgent need for accurate emission factors which are representative of typical Oklahoma grain elevators. The only existing source of emission factors for grain elevators is EPA's AP-42 document. Examinations of the research methods used to develop the AP-42 estimates along with the analysis of other available data caused the Oklahoma Grain and Feed Association (OGFA) task

force, Oklahoma DEQ representatives, and members of the Oklahoma Air Quality Council (AQC) to become concerned that the existing AP-42 emissions estimates were seriously flawed and overstated. (This same concern is being mirrored at the national level, as evidenced by negotiations between the National Grain and Feed Association and Federal EPA during a meeting in Raleigh, N.C. on Aug. 29, 1994.) The use of overstated emissions estimates would result in unnecessary operating restrictions, major investments in emission control equipment, and excessive annual emission fees.

Proposal for a Dust Emission Study

Due to the concern over the existing emission factors and the critical need for accurate data, a team of faculty from the OSU Division of Agricultural Sciences and Natural Resources proposed a grain dust emission study from which accurate, representative, and scientifically defensible emission factors could be developed. The study was formally proposed to the Oklahoma AQC and DEQ during a Grain and Feed Industry Committee meeting on May 31, 1994. The Oklahoma AQC and DEQ subsequently accepted the concept of a grain dust emission study. During the June 14th AQC meeting the Oklahoma DEQ, Oklahoma AQC, and grain industry task force agreed to the text for a grain industry subchapter of the Oklahoma Clean Air Act. The grain industry sub-chapter specified that the existing AP-42 emission estimates for receiving and loading would be used as interim values for a period not to exceed one year, during which time a grain dust emission study would be conducted to develop permanent emission factors. Sub-chapter 24 was formally passed by the AQC on June 14th, 1994 and subsequently passed by the DEQ Board on September 28, 1994. The final protocol for the grain dust emission study was submitted to the Oklahoma DEQ and AQC by the OSU faculty team on September 16, 1994. The protocol was reviewed by DEQ staff and formally accepted on September 20, 1994. The tests were conducted at Wheeler Brothers Elevator in Alva, OK on September 26-27, 1994.

Overview of the Study Design

The OSU study was designed to provide a realistic estimate of dust emissions from receiving and load-out operations at a typical Oklahoma grain elevator. These operations are the primary potential sources of dust emissions since most other elevator handling processes involve enclosed conveying equipment, and/or are conducted inside an enclosed facility. The study had four components:

(1) receiving-end dump truck,
(2) receiving-hopper-bottom truck,
(3) receiving-dump pit air baffle effectiveness, and
(4) load out.

The receiving study was separated by truck type because the differences in height was expected to impact dust emissions. Truck type was not expected to significantly influence emissions during load-out operations.

The basic design of the emission test was to perform typical receiving and load-out operations in a totally enclosed dump shed and to evacuate all of the air in the shed through filter bags, capturing the airborne dust particles. The suction system used to capture grain dust was engineered to capture emitted grain dust while not artificially separating fine particles from the grain. Two high-volume propeller fans were used to keep all airborne dust in suspension until it could be evacuated through the filter bags.

The facility selected for the test is typical of many Oklahoma country elevators. Two truck types, a hopper-bottomed semi-trailer and an end-dump tandem axle truck, were used for the receiving tests. Most of the grain trucks delivering to Oklahoma elevators would be very similar to one of the two truck types used in the test. The unloading chute was approximately 2 feet above the top of the bed of the truck used for the load-out study. Unloading chute height varies somewhat between elevators. Most facilities are designed to minimize the open distance between the spout and the truck bed to limit that amount of grain lost (shrink) which occurs during loading. The dump pit dust control baffles used for the baffle efficiency test restricted 86% of the open area on the dump pit in their fully closed position.

Key Issues Addressed

Airflow

The major criticism of some past grain dust emission studies was representing material removed from the grain by a pneumatic system as a measure of uncontrolled dust emissions from that handling point. In other words, the systems were aspirating fine particles from the grain, not measuring emitted dust. It is critical to design the airflow used in a dust control study to not unduly increase the amount of fine material separated from the grain stream while still capturing the particles which would normally become airborne. On the other hand, the airflow has to be sufficient to capture the airborne particles in a reasonable period of time, before they settle to the floor.

The airflow rates used in the OSU study was carefully engineered to address these issues. The airflow used was more than sufficient to capture airborne dust, while minimizing the extent to which the grain was artificially "aspirated". The centrifugal blower used in the test created a total air exchange in the dump shed in approximately 10 minutes. Because the inlet pipe was positioned close to the emission point, most of the airborne dust was captured in less than this period of time. Based on visible observation, the system removed most of the airborne dust within 3-4 minutes. The two high volume propeller fans were designed to keep all airborne particles in suspension until they could be evacuated through the filter bags. The actual air volume evacuated through the filter bags was carefully documented during the tests. The airflow rates indicate that the system moved an air volume equal to 150% to 200% of the total volume of the dump shed, providing further evidence that all airborne dust should have been captured.

Grain Quality

Grain used in an emission study should be representative of grain handled by typical grain elevators. Oklahoma grain elevators typically co-mingle grain received from a variety of sources. Some of the grain received will be straight from the farmer's combine, some will have been stored in on-farm storage and some may be shipped from other elevators. Handling grain creates additional dust due to the kernel to kernel and handling equipment abrasions. Dust may also be removed (emitted) during some handling processes. Grain quality also varies from year-to-year, and from farm to farm.

These considerations were addressed by officially sampling and grading each load of grain used in the emission test. Official grades were obtained with Federal Grain Inspection Service five year average grade data for Oklahoma. The comparison indicated that the grain used in the test was representative of grain handled by Oklahoma elevators.

Test Results

The OSU Grain Elevator Dust Emission Study measured dust emissions during receiving and load-out operations. For the receiving operation, dust emission estimates were obtained for both hopper-bottom trailers and end-dump trucks. The efficiency of dump-pit air baffles were also examined. The results of the test are summarized in Table 1.

Table 1
OSU Grain Elevator Dust Emission Study
Summary of Results

	Airborne Dust (lbs/ton of grain handled)
Receiving- Hopper-Bottom Semi Trailer	**.019**
Receiving-End Dump Truck	**.039**
Receiving-Overall Average	**.029**
Load-out	**.008**
Receiving-Dump Pit Dust Control Baffle Efficiency	**21%**

Floor Dust

Two supplemental tests were also conducted as part of the OSU Grain Dust Emission Study. Prior to opening the dump shed doors the floor was completely swept after each test and the amount of material recovered was carefully weighed and bagged. These measurements were not intended to reflect dust emissions since the test had been carefully designed to capture all

airborne dust in the filter bag system. The amount of floor dust collected ranged from 50% to 178% of the airborne dust, depending on the operation and truck type. The load-out operation resulted in the lowest ratio of floor dust to airborne dust. The design of the dust capture system may have been partially responsible for the low ratio of floor dust captured during the load-out process. The suction inlet pipe was positioned directly in line with, and fairly close to the load-out spout. The air capture system may have been collecting both light, normally airborne, and heavier, not normally airborne, particles during the load-out tests.

The second supplemental study was designed to document the amount of "floor dust" normally recovered by elevator crews during OSHA mandated housekeeping procedures. This amount was determined by conducting the unloading operations with the doors open, sweeping the dump shed and weighing the amount of dust recovered. The material recovered during housekeeping procedures averaged 42% of the total floor dust. The results of these supplemental tests are provided in Table 2.

Table 2
OSU Grain Elevator Dust Emission Study
Summary of Supplemental Tests

	Floor Dust (lbs/ton grain handled)	Housekeeping Adjustment* (lbs/ton grain handled)
Receiving-Hopper Bottom Semi Truck	.034	.015
Receiving-End Dump Truck	.049	.021
Receiving-Overall	.042	.018
Load-out	.004	.002

*The housekeeping adjustment for the End-dump (.0208) was determined from four open door floor sweeping tests. The other adjustment factors were estimated using the same ratio (42.58%) of recovered floor dust to total floor dust.

Proposed Emission Factors

The proposed emission factors were designed to provide state regulatory agency with easily defendable estimates of grain elevator dust emissions. The factors were created by adding the weight of the floor dust, less the amount recovered during housekeeping procedures, to the airborne dust captured. Adding the adjusted floor dust measurements to the airborne dust collected provides an absolute upper limit on dust emissions since the combined total represents all of the particles separated from the grain, both airborne and non-airborne. While probably overstating actual dust emissions, the proposed emission factors also counter any possible arguments over the airflow rates used in the test. If, despite the documentation to the contrary, it was assumed the airflow was insufficient to capture some airborne dust particles, those particles would have been measured in the floor dust and thus are still included in the emission estimates.

The proposed emission factors are provided in Table 3. The calculations can be illustrated by considering the case of the receiving study with the hopper bottom truck (first line of numbers in Table 3). The amount of airborne dust captured was .019 lbs/ton. An amount of material equal to .034 lbs./ton of grain unloaded was swept from the floor. Based on the supplemental test, conducted with the dump shed doors open, .015 lbs./ton is recovered in normal housekeeping. The proposed emission factor for the receiving operation with hopper bottom trucks is .038 lbs/ton (airborne dust + floor dust - housekeeping adjustment). In this case the proposed emission factor is 200% of actual airborne dust emissions. The calculations for the remaining emission factors follow an identical format.

Table 3
OSU Grain Elevator Dust Emission Study
Calculation of Proposed Emission Factors

	Airborne (A)	Floor Dust (B)	Housekeeping Adjustment (C)	Proposed Emission Factors (A+B-C)
Receiving-Hopper Bottom	.019	.034	.015	**.038**
Receiving-End Dump	.039	.049	.021	**.067**
Receiving-Overall	.029	.042	.018	**.053**
Load-out*	.008	.004	.002	**.011**
Receiving-Dump Pit Dust Control Baffle Efficiency	21%	**	Not Applicable	**21%**

*Columns do not add to proposed emission factor due to rounding
** The baffles were more effective in controlling floor dust (52% efficiency)

Clarifying Response to MRI Report on OSU Dust Emission Study

Ronald T. Noyes, P.E.
Professor, Extension Agricultural Engineer
and
Phil A. Kenkel, Ph.D.
Associate Professor, Extension Economist
Division of Agricultural Sciences and Natural Resources
Oklahoma State University
February 13, 1995

This paper is written to clarify points raised by MRI staff regarding decisions and procedures in the OSU dust emissions study at Alva, OK on September 26-27, 1994. This field study was requested by Oklahoma Department of Environmental Quality [ODEQ] for use in meeting requirements of the Oklahoma Air Quality Act of 1994. OSU researchers responses to the specific points on pages 13 and 14 in MRI Report, "PM-10 Test Strategies for Grain Elevators" are listed below.

Summary Discussion of Emission Study

1. Dustiness of grain: Trucks were loaded outside at Alva and a some dust escaped, but each time grain is handled the abrasion and impact of kernels on bins, conveyors or other kernels creates added dust. Each truck load was officially graded by FGIS standards. The HRW wheat in these tests was representative of FGIS grades of other wheat throughout Oklahoma. Wheat from the combine typically has less dust than wheat that has been handled multiple times.

2. Representative Load Out: Alva's dump shed load-out spouts are typical of most concrete driveway loadouts in grain producing states. Most elevators limit distance from spouts to truck bed sidewalls to reduce "shrink" -- loss of marketable grain weight from lost dust. OSU tests used two large fans to keep air stirred and rotating clockwise past the suction pipe inlet to the blower to increase filter bag catch.

3. Simulated Wind in Tests: Two "man-cooler" stand mounted propeller fans were set diagonally opposite, blowing 12 to 15 mph along the wall for clockwise air rotation to keep dust particles in suspension until captured in the filter bags. While not as strong as ambient winds, the constant turbulence and circulation past the suction pipe was designed to increase the capture of heavier airborne dust particles. Floor dust recovery adjusted for "open door" receiving was added to airborne dust.

4. Particle Size/PM-10: ODEQ staff indicated that TSP was preferred in field tests. Particle size distribution analysis didn't appear to be significant. Inside testing in sealed dump shed simplified receiving and loadout test procedures. Floor dust

adjusted for "open door" conditions was added to airborne dust on loadout tests. Dust samples archived in sealed bags are available for particle size analysis.

5. Receiving Study Biases--Upper/Lower Bounds: OSU tests measured TSP. PM-10 sampling would probably result in lower dust emission values. Adjusted floor dust was combined with airborne samples for recommended conservative emissions upper bounds to ODEQ in 2/2/95 report. Airborne dust plus 57.2% of floor dust was recommended to account for wind condition. [Sections 4/5 below.]

6. Load Out Test Biases: Loadout spout discharge height varies. OSU tested for TSP without aspirating grain by evacuating one dump shed volume in 3-4 times the unload or load time, then doubled it for a blower time of 20 minutes. Filter blower started when the receiving/loadout test started. We expect PM-10 emissions levels would be lower than OSU's adjusted results. A 40 minute split test verified that all significant dust weight was captured in 20 minutes.

Extended Discussion of Emission Study

1. Dustiness of grain: Some grain elevators use outside load-out spouts where wind can blow through the grain stream. Trucks were loaded outside at Alva and a some dust escaped. However, while some grain dust is lost while loading, grain dust is generated continually during each handling from damage by kernel impacts with truck beds, silo walls, dump grates and bin floors, or other kernels. Thus, the grain tested at Alva would have had more grain dust at the time of the tests than that same grain would have had when the trucks were sampled at the elevator during harvest before dumping and handling through a variety of conveyor and storage impact/abrasion sequences.

The issue of the grain condition prior to receiving and load out tests was addressed in the study protocol by officially sampling and grading each truck load of grain before each receiving test. Grain grades obtained were representative of Oklahoma wheat. We feel the issue of whether the net impact of the loading process added or subtracted dust is not relevant as long as the grain condition was representative during tests. Using official wheat grades is one measure of standardizing tests.

Some country elevators and terminals receive grain trucked straight from the field during harvest as well as grain from on-farm storage. Large country elevators and terminals also receive grain from other elevators. Therefore it is difficult to define a handling history which is entirely representative for industry wide emission factors.

2. Representative Load Out: We realize that load out conditions vary. Dump shed driveway silo load-out spouts used at Alva are typical of most concrete elevator dump shed loadouts throughout Oklahoma and most other grain states. Unloading spout discharge height designs will obviously have more variation between elevators

than truck dump height and dump pit design. However, most elevators limit the distance between the spout and truck bed sidewalls to eliminate load out "shrink" or loss of marketable grain weight from dust blowing out.

Even though the OSU load out test was conducted inside the dump shed drive, the two high volume propeller fans did simulate ambient winds to some extent. The suction pipe inlet to the blower and filter bags was approximately in line with and about 10 feet from the load-out spout where airborne dust could be pulled from directly above the truck bed. From this aspect, the tests results may overstate load out emissions by allowing the blower to pull in dust particles coming over the side of the truck by the suction pipe which might have otherwise settled out as floor dust.

Designating emission factors for multiple load-out spout heights could lead to difficult permitting and enforcement complications, particularly since many elevators have several unloading spouts. It would be difficult for an elevator to predict or keep track of and for state regulators to monitor what proportion of an elevators annual capacity is unloading through each load-out spout. Using data of a "typical" load-out spout simplifies compliance.

3. Simulated Wind in Tests: Two large man-cooler propeller fans [fans] mounted on stands were positioned at diagonally opposite corners of the dump shed. Each fan faced along the side of the dump shed. Air velocities about 5 feet from the fans were measured at 12 mph and 15 mph. This clockwise fan air movement was designed to keep normally airborne particles in suspension until captured in the filter bags, not aspirate grain dust and particles from the grain stream.

Although not as strong, the circulating turbulent air in the dump shed partially simulated wind currents that would blow them out of the dump shed under normal unloading or loading conditions. Fan air streams were directed slightly above horizontal, to provide up lift. The blower and fans ran until the air appeared to be clear, about 20 minutes or about two complete air exchanges.

To compensate for not testing with wind blowing through open dump shed doors [as most country and terminal elevators do] using outside monitoring, <u>we included a supplemental floor dust test</u>. As soon as the blower and fans were shut off during each test, we collected the floor dust in plastic sample bags and weighed it. [All test samples were weighed on Oklahoma Department of Agriculture Weights and Measures Division certified precision scales.] Then we conducted unloading operations with drive doors open and the wind blowing through the dump shed. Data from floor dust collected and weighed from open door tests were used to adjust the closed door floor dust data from the sealed dump shed.

These "floor dust" weights adjusted to reflect dust blown out of the dump shed were combined with airborne dust sample weights to develop recommended emissions data for use by ODEQ in determining dust emitted during elevator

receiving and load out operations per ton of grain handled in Oklahoma elevators. We feel these proposed conservative set of dust emission factors submitted to ODEQ on February 2, 1995 address the "open dump shed wind factor" concern by adding the percentage of "floor dust" carried out of the dump shed by wind to airborne dust.

Although the OSU test was limited, it does provide real values from wheat typical by grade to HRW wheat throughout Oklahoma. While some material which settled to the floor despite the fan air currents might become temporarily airborne by the suction effect of wind blowing through open dump sheds, it is unlikely that the majority of this dust would stay airborne long enough to cross elevator property lines much of the time.

4. Particle Size/PM-10: From discussions with ODEQ staff and their approval of the Alva field test protocol, we understood that they wanted to find how much dust was released from the grain in receiving and load out operations. During meetings with ODEQ staff, they indicated more interest in TSP than PM-10 for dust emissions determination, so particle size distribution analysis didn't appear to be significant. We considered outside load out testing for TSP using hi-vol samplers and air dispersion modeling, but opted for inside tests to evaluate airborne and non-airborne dust levels by total dust captured in the sealed dump shed since dump shed load out is a common operation at many U.S. elevators. Dump shed load out tests allowed us to simplify our test procedures by conducting both sets of tests in the same test setup.

Using TSP, this field study measured the level of dust that remained airborne and could be emitted from an open dump shed, then added a floor dust adjustment factor. The added factor was determined by the percentage of floor dust in the open door tests divided by floor dust from closed door tests using end dump trucks. This test resulted in only 42.8% as much floor dust in open door tests as closed door. Thus, we added 57.2% [the percent of floor dust that blew out of the end dump truck in open door receiving floor dust tests.] of all closed door test floor dust readings to the airborne sample weights to develop a recommended dust emission factor for all four categories. We feel this provides conservatively heavy weighting to the original airborne readings by adding an estimated amount of dust that would probably have blown out during open door dumping.

5. Receiving Study Biases--Upper/Lower Bounds: The OSU test was designed to measure TSP, not PM-10. Since it is unlikely that all the airborne particles were collected were 10 microns or less, OSU tests measured TSP. PM-10 sampling would probably result in lower dust emission values. The February 2 OSU emission study recommendations to ODEQ modified the airborne data by including an adjustment that accounted for the percentage of floor dust that blew out during end dump truck dumping with shed doors open. [Details in section 4.] All data was adjusted using the same "housekeeping adjustment" of 42.8% This was the amount of floor dust that did not blow out during end dump truck "open door" receiving tests, compared to the amount of floor dust during "closed door" tests.

So recommended emission values included 57.2% of floor dust plus airborne dust as an upper bound. The net effect was the combined lighter non-airborne floor dust and airborne dust form a conservative recommended data set. We feel this is conservative as only the lighter portion of the dust that did blow out of the dump shed would be carried off the elevator property. After leaving the driveway tunnel effect, the wind velocity drops and heavier dust will settle out near the dump shed.

Airborne dust samples collected in the filter bags and non-airborne floor dust samples are archived in moisture proof containers and are available for particle size distribution analysis if desired. Several methods can be used to determine particle size analysis (sonic sieving, wet sieve analysis, dry sieve analysis or cascade impaction). Determining wheat fraction percentages that are included with the non-airborne dust particles will require an agreement on an accepted procedure.

The MRI Report critique correctly points out that many variables effect dust emissions at a grain elevator. These factors also point to the problems in applying an emission factor to a widely varying biological based process. Attempting to isolate and quantify each of these variations would be of little value since the grain handled by a typical elevator is a co-mingled composite of many loads, received from a wide area, each with a different handling history. Grain quality and dustiness vary randomly from year-to-year, from one geographic area to another and from one part of the season to another.

6. Load Out Test Biases: As stated previously, there is no standard height for elevator unloading chutes. As the critique points out, the OSU test measured TSP. PM-10 emissions would obviously be lower than the results recorded.

The primary purpose of the study was to determine amount of airborne grain dust that can be collected during and after loading or dumping of typical trucks without aspirating the grain dust by pulling excess air volumes through the grain as it flowed into or out of trucks. We elected to use a 7 1/2 HP centrifugal aeration blower that provided one air exchange in about 3-4 times the dumping or loading time.

During all tests where airborne dust was collected, we started the blower as soon as dumping or loading started. The suction pipe was located at about 7 feet above the dump shed floor about mid-point of the truck bed so it would not aspirate much of the heavier dust particles that normally settle out quickly. If a low level suction pipe point was selected near the floor, heavier particles may have been captured.

To verify that twenty minutes was adequate blower and fan operating time, on one test we stopped the blower at 20 minutes but left the fans running, weighed the filter bags [which took less than three minutes] then reconnected the filter bags and ran the blower for an additional 20 minutes to check for suspended dust. The additional dust collected in 40 versus 20 minutes of blower time was insignificant.